TOOL ADAPTORS Catalog

A/C TOOLS

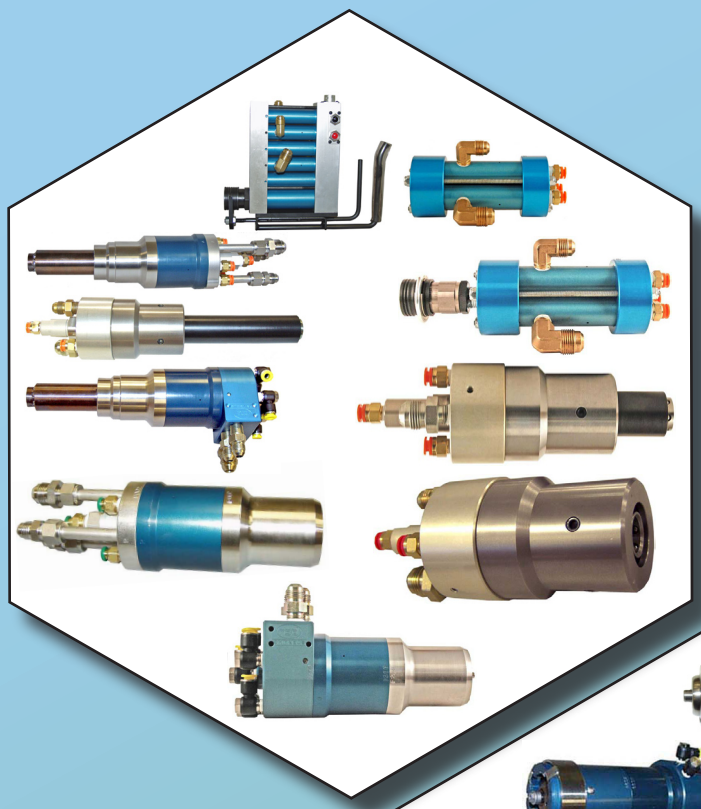

RADIATOR &
POWER STEERING TOOLS

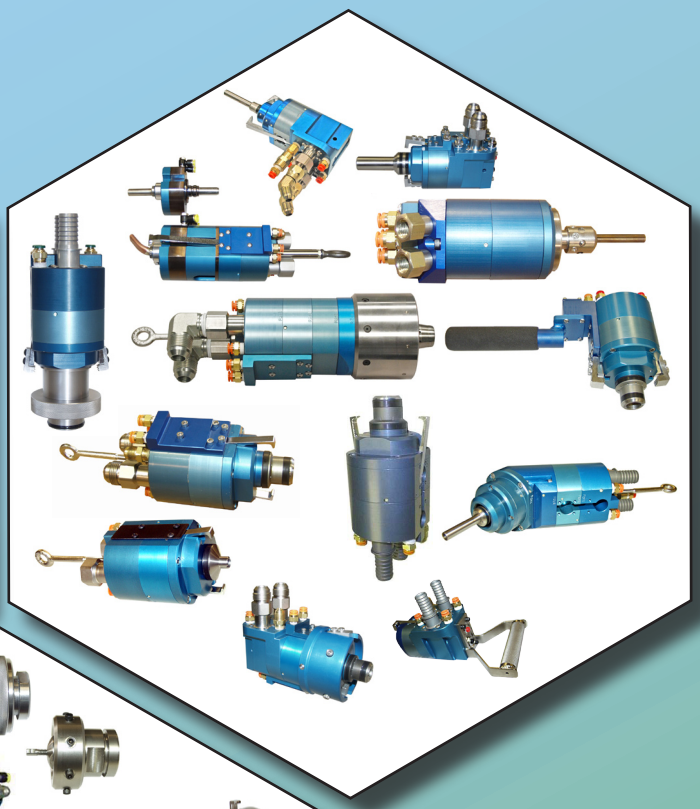

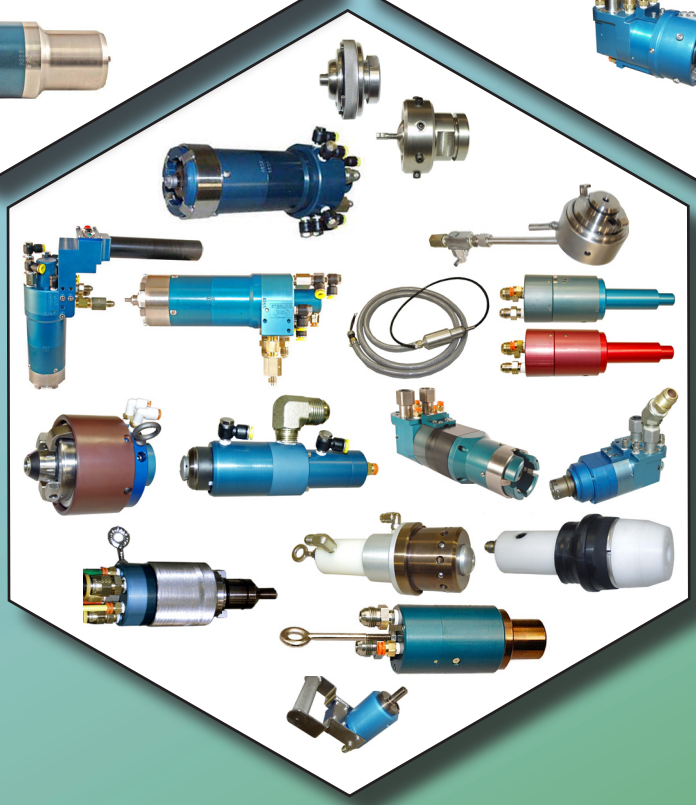

BRAKE, WINDSHIELD WASHER, TRANSMISSION TOP-OFF,
LEAK TEST, & MANUAL ADAPTORS

PCU Production Control Units, Inc.
2280 West Dorothy Ln., Dayton Ohio 45439-1892, USA
Phone: 937-299-5594 • FAX: 937-299-3843 • www.pcuinc.com

REGISTERED ISO 9001: 2008, ISO 14001: 2004

03-11-10

We specialize in custom Couplers to suit your application.

Series 250

Series 410

Series 500

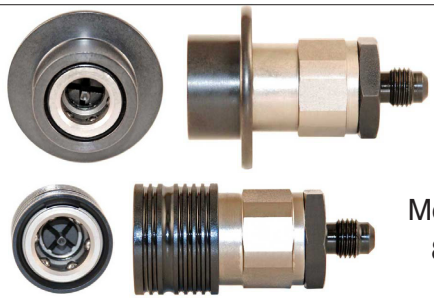

Model 86

Model 87

Series HFC-134a

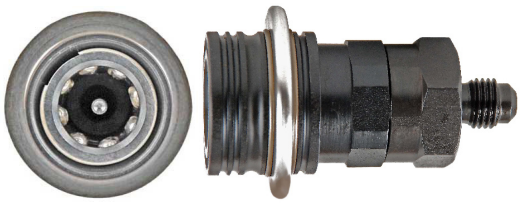

Series 25-Model EPF

Series 91

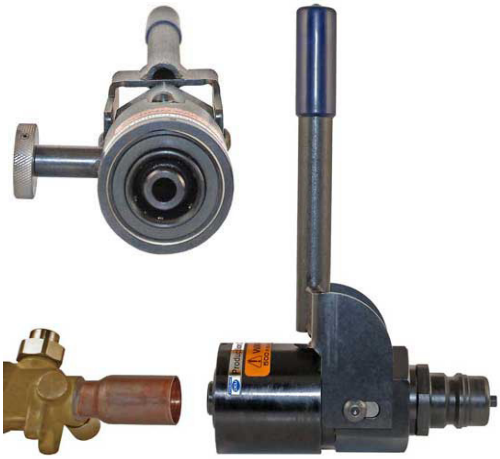

Series 98

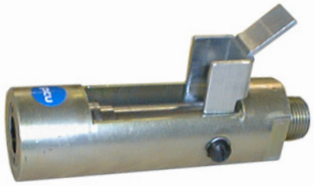

Series 93

Series 10

Series 250 Evac & Charge

Power Coupler

TABLE OF CONTENTS

Tool Adapters

Production Control Units, Inc.-Coupler Products
2280 West Dorothy Lane, Dayton, Ohio 45439-1892 USA - Phone (937) 299-5594 - FAX: (937) 299-4843
PCU Web Site: www.pcuinc.com - E-mail: couplers@pcuinc.com

Coupler Application Data Inquiry

Company _____ Phone # _____

Contact _____ Fax # _____

Address _____ E-mail _____

City _____ State _____ Country _____ Zip _____

Type & brand name for current coupler _____

Customer product manufactured _____

Type of coupler required

Size and type of tube or port to be sealed _____

☐ Straight ☐ Swaged ☐ Expanded ☐ Other _____

Length of tube or port available for coupler _____

Quantity required _____

Delivery due date _____

How will the coupler be used?

Refrigerant processing
What type of refrigerant? (HFC-134a, HP62, R-22, etc.) _____
Oil processing
What type of oil (Mineral, Polyol Ester, PAG, etc.) _____ (Attach MSDS)
Leak Burst testing
Maximum pressure & type of test media? (Air, Helium, etc.) _____
Vacuum
What level of vacuum needs to be achieved? _____
What Oil be present during vacuum pump down? _____
If "yes", what type of oil? _____

Additional process information

_____

_____

_____

_____

Along with your request for quote, please provide (1) copy of print showing area to be sealed, and (3) quality sample parts.

Series 13000-003
Evacuation & Refrigerant Charging Tool

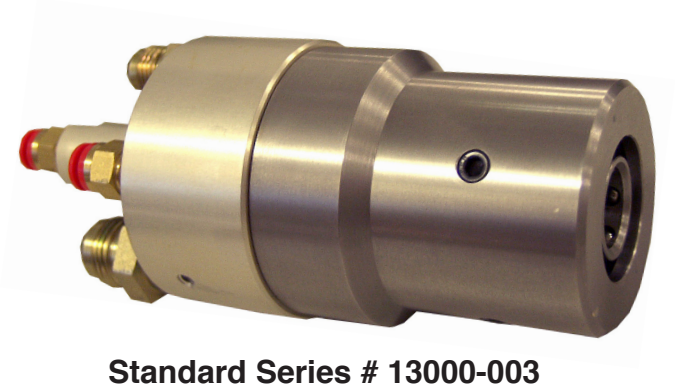

Standard Series # 13000-003
High-Side J639

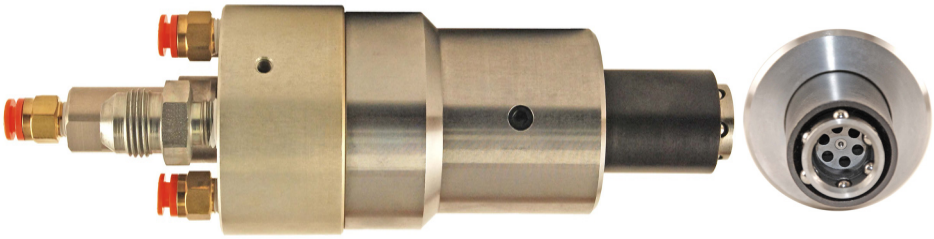

Extended Nose Model

FEATURES

- Minimum refrigerant loss
- Automatic disconnect capability
- Zero connection force with clamp tell-tale
- Automatic operation, upon connection to fitting
- High vacuum and refrigerant flow rates
- Air operated
- Lightweight
- Connection to J639 High-Side fitting

Reduce labor content and minimize emission of refrigerant to the atmosphere!

The Model 13000-003 Charging Tool is the interface adapter for a refrigerant charging system. It is designed for direct connection to quick-connect HFC-134a A/C process fittings for evacuation and refrigerant charging, with de minimis refrigerant loss to atmosphere from the tool, and the additional benefit of automatic disconnect at cycle completion.

Tool operation is controlled automatically in that the operator only has to locate the tool on the process fitting. The tool then clamps (indicated by the tell-tale), seals, and initiates the charging machine cycle including evacuation, vacuum check and refrigerant charging. After cycle completion, the process fitting seal is reseated and the tool disconnects.

The clamping mechanism used is the time proven ball lock method. The six hardened steel balls which are constrained in the charge gate body are secured onto the ball groove taper on the process fitting by the locking sleeve. Securing the balls on the taper assures positive force on the nose seal.

The Model 13000-003 Charging Tool is used with hydraulic driven ram charging systems. Application to other equipment, including competitive charging systems, can also be accomplished.

Save money with the PCU Model 13000-003 Charging Tool. Contact us with your application and equipment specifications at (1-937-299-5594).

Series 13000-003 Evacuation & Refrigerant Charging Tool

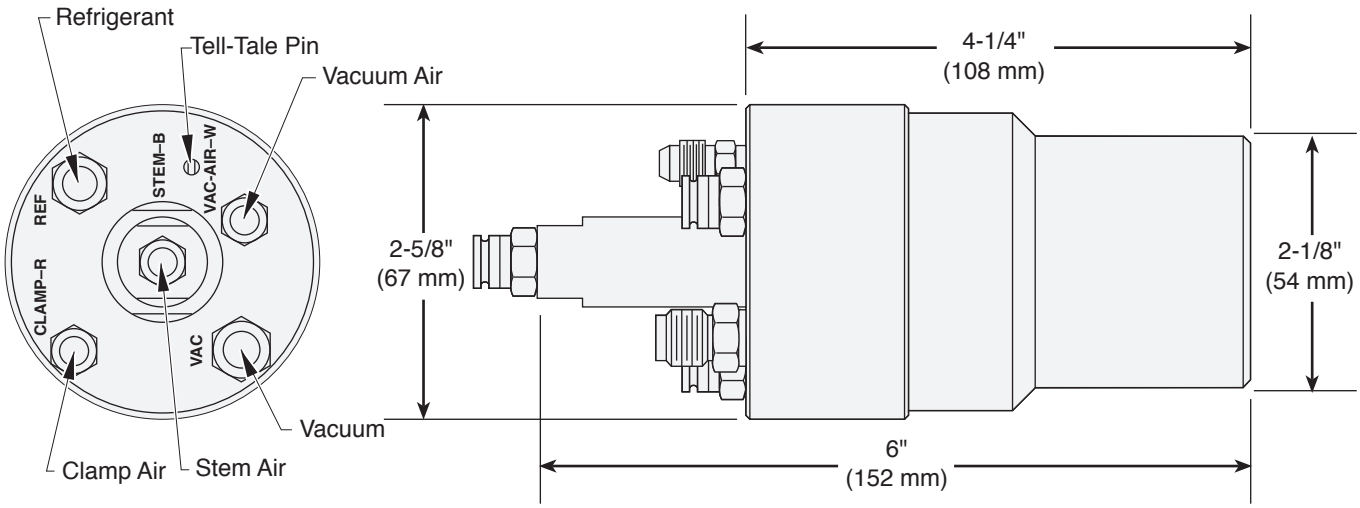

STANDARD STOCK PART NUMBER: 48440

TECHNICAL SPECIFICATIONS:

Weight . . . . . .3.1 lbs (1.4 kg)

Vacuum range . . . . . 0–760 TORR (0–760 mmHg)
Vacuum flow . . . . . 2.5 SCFM
Vacuum port fitting . . . . . 1/2" JIC flare

Refrigerant. HFC-134a
at 600 PSIG max. (42 kg/cm^2)
relieves at 350 PSIG (25 kg/cm^2)
Refrigerant port fitting . . . . . 3/8" JIC flare
Tool flow rate 225g/sec
(Typical value based on external drive force of 750 PSI)

Air pilots . . . . . (Vacuum, Clamp & Stem air)
Air supply pressure . . . . . 80 PSIG (5.6 kg/cm^2)
Air port fittings. . . 1/4" dia. one touch connectors, color coded

Process fitting compatibility . . . . . .SAE J639
Process fitting nose seal . . . . . Molded
Process fitting clamp system . . . . . .PCU BalLoc

Oil compatibility. . . . . Polyolester or PAG

PATENTS:
This tool is manufactured under U. S. Patent No. 4,805,417

STANDARD PART NUMBER 48440:

1.5" Nose Extension: Part No. 101576
1.75" Nose Extension: Part No. ...209920-001
3.0" Nose Extension: Part No. 100876
5.0" Nose Extension: Part No. ...209901-001

*** Please refer to PB053 for series 15000 low-side tool.**

Production Control Units, Inc.
2280 West Dorothy Lane, Dayton, Ohio 45439-1892 Phone (937) 299-5594 FAX: (937) 299-4843

Series 15000-003
Evacuation & Refrigerant Charging Tool

FEATURES

- Minimum refrigerant loss
- Automatic disconnect capability
- Zero connection force with clamp tell-tale
- Automatic operation, upon connection to fitting
- High vacuum and refrigerant flow rates
- Air operated
- Lightweight
- Connection to J639 Low-Side fitting

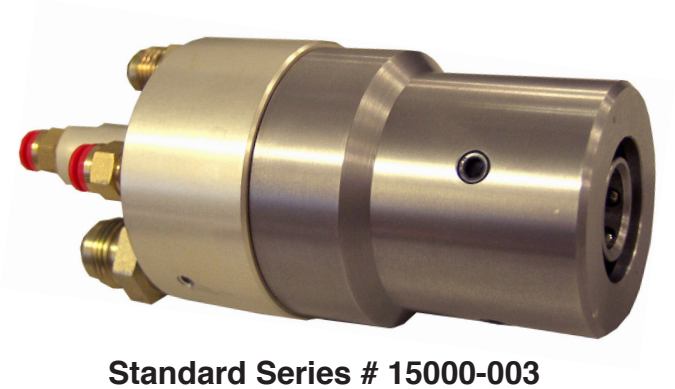

Standard Series # 15000-003
Low-Side J639

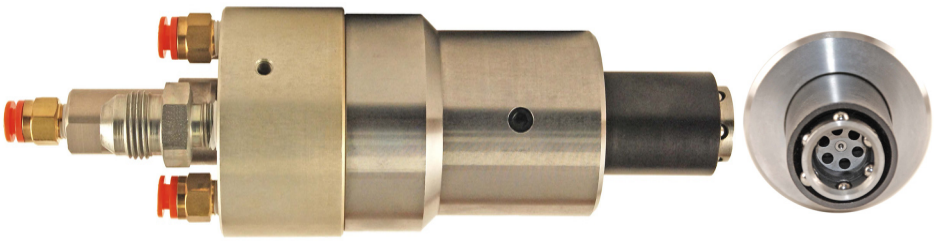

Extended Nose Model

Reduce labor content and minimize emission of refrigerant to the atmosphere!

The Model 15000-003 Charging Tool is the interface adapter for a refrigerant charging system. It is designed for direct connection to quick-connect low-side HFC-134a A/C process fittings for evacuation and refrigerant charging, with de minimis refrigerant loss to atmosphere from the tool, and the additional benefit of automatic disconnect at cycle completion.

Tool operation is controlled automatically in that the operator only has to locate the tool on the process fitting. The tool then clamps (indicated by the tell-tale), seals, and initiates the charging machine cycle including evacuation, vacuum check and refrigerant charging. After cycle completion, the process fitting seal is reseated and the tool disconnects.

The clamping mechanism used is the time proven ball lock method. The six hardened steel balls which are constrained in the charge gate body are secured onto the ball groove taper on the process fitting by the locking sleeve. Securing the balls on the taper assures positive force on the nose seal.

The Model 15000-003 is used with hydraulic driven ram charging systems.Application to other equipment, including competitive charging systems, can also be accomplished.

Save money with the PCU Model 15000-003 Charging Tool. Contact our Order Department at (1-937-299-5594) with your application and equipment specifications.

Series 15000-003 Evacuation & Refrigerant Charging Tool

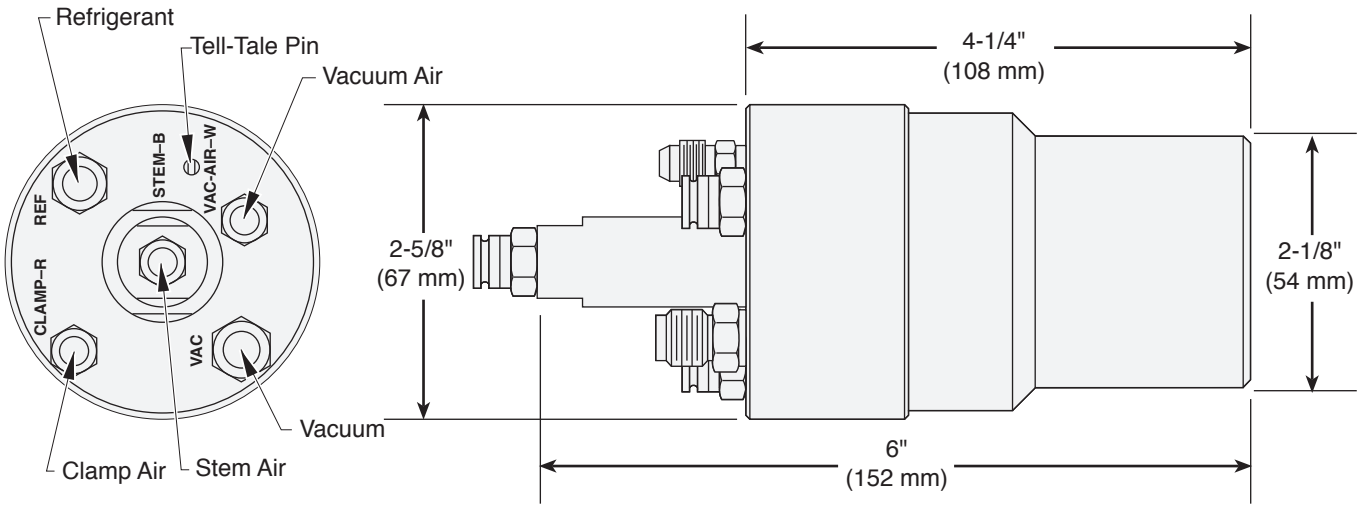

TECHNICAL SPECIFICATIONS:

Weight . . . . . .3.1 lbs (1.4 kg)

Vacuum range . . . . . 0–760 TORR (0–760 mmHg)
Vacuum flow . . . . . 2.5 SCFM
Vacuum port fitting . . . . . 1/2" JIC flare

Refrigerant. HFC-134a
at 600 PSIG max. (42 kg/cm^2)
relieves at 350 PSIG (25 kg/cm^2)
Refrigerant port fitting . . . . . 3/8" JIC flare
Tool flow rate 255g/sec
(Typical value based on external drive force of 750 PSI)

Air pilots . . . . . (Vacuum, Clamp & Stem air)
Air supply pressure . . . . . 80 PSIG (5.6 kg/cm^2)
Air port fittings. . . 1/4" dia. one touch connectors, color coded

Process fitting compatibility . . . . . .SAE J639
Process fitting nose seal . . . . . Molded
Process fitting clamp system . . . . . .PCU BalLoc

Oil compatibility. . . . . Polyolester or PAG

PATENTS:
This tool is manufactured under U. S. Patent No. 4,805,417

STANDARD PART NUMBER 49946:

1.5" Nose Extension: Part No. ...102997-001
3.0" Nose Extension: Part No. ...102997-002

*** Please refer to PB023 for series 13000 high-side tool.**

Production Control Units, Inc.
2280 West Dorothy Lane, Dayton, Ohio 45439-1892 Phone (937) 299-5594 FAX: (937) 299-4843

Series 104
Evacuation & Refrigerant Charging Tool

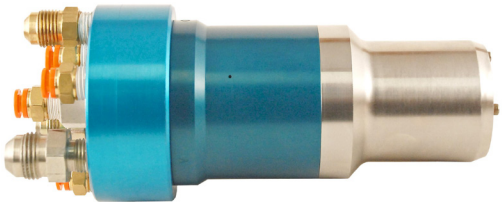

104001-700 Straight Manifold

104001-002 Straight Manifold

Hi-Side

104001-004 90˚ Manifold

FEATURES

- Minimum refrigerant loss
- Automatic disconnect capability
- Zero connection force
- Automatic operation, upon connection to fitting
- High vacuum and refrigerant and oil flow rates
- Air operated
- Lightweight
- Separate Refrigerant and oil vacuum connections

Reduce labor content and minimize emission of refrigerant to the atmosphere!

The Series 104 Charging Tool is the interface adapter for a refrigerant/oil charging system. It is designed for direct connection to quick-connect HFC-134a A/C hi-side process fittings for evacuation and refrigerant/oil charging, with de minimis refrigerant loss to atmosphere from the tool, and the additional benefit of automatic disconnect at cycle completion.

Tool operation is controlled automatically. The operator only has to locate the tool on the process fitting, it clamps, seals, and initiates the charging machine cycle including evacuation, vacuum check and refrigerant charging. After cycle completion, the process fitting seal is reseated and the tool disconnects.

The clamping mechanism used is the time proven ball lock method. The eight hardened steel balls are constrained in the charge gate body, and secured onto the ball groove taper on the process fitting by the locking sleeve. Securing the balls on the taper assures positive force on the nose seal.

The Tool is designed to operate with the Mass Flowmeter Refrigerant Charging System. It is also adaptable to applications that require air-piloted valve operation with automatic clamping and fitting stem operation.

The tool contains three separate fluid circuits, controlled by air pilot pressure, which may be used for vacuum, refrigerant, salvage, oil, or any other fluid.

Standard series 104 is designed for high flow rate up to 300 g/sec at 200 PSI. Slower flow rates are available please contact PCU Engineering with your application and equipment specifications.

Save money with the PCU Series 104 Charging Tool. Contact our Order Department (1-937-299-5594) with your application and equipment specifications.

Compucharge Series 104 Evacuation & Refrigerant Charging Tool

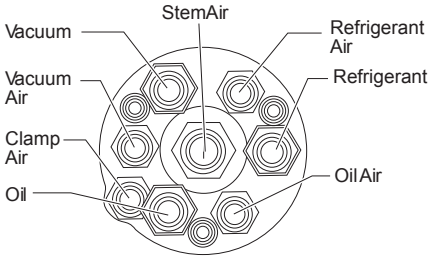

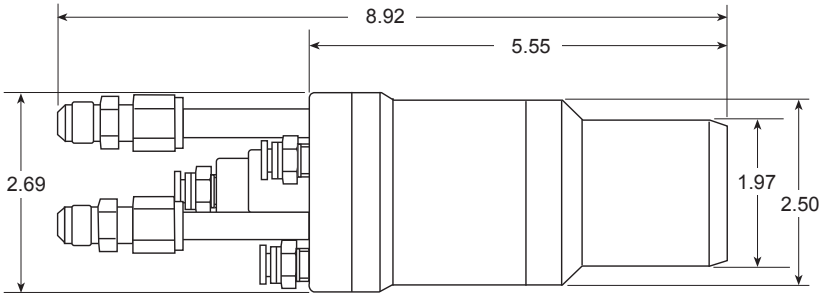

(104001-002 Shown)

STANDARD STOCK PART NUMBERS: **104001-002 (STRAIGHT MANIFOLD)**
104001-004 (90˚ MANIFOLD)

TECHNICAL SPECIFICATIONS:

Weight . . . . . .4.25 lbs (1.9 kg)

Vacuum range . . . . . 0–760 TORR (0–760 mmHg)

Refrigerant. HFC-134a
Opens with pressure air @ 60 psig

Oil . . . . . Polyolester or PAG
Opens with pressure air @ 60 psig

Tool flow rate (typical) . . . . . .300 g/sec at 200 PSI
(Contact PCU for Slower Flow Rates)

Max Refrigerant Pressure . . .200 psig @ 70 psi air
. . . . . .300 psig @ 80 psi air
. . . . . .400 psig @ 90 psi air
. . . . . .500 psig @ 100 psi air

Vacuum port fitting. . . . . 1/2" JIC flare

Refrigerant & oil port fitting . . . . . 3/8" JIC flare

Air pilots. . . . . .
(Vacuum, Refrigerant, Oil, Clamp & Stem air)

Air supply pressure . . . . . 70 PSIG (4.9 kg/cm^2)
Air port fittings . . . . 1/4" dia. one touch connectors

Flow Capacity (Refrig., Vacuum, Oil). 0.9Cv
(typical)

Process fitting compatibility . . . . . .SAE J639
Process fitting nose seal . . . . . .Molded
Process fitting clamp system. . . . . .PCU BalLoc

Oil compatibility . . . . . Polyolester or PAG

PATENTS:

This tool is manufactured under U. S. Patent No. 6,298,886

Contact PCU for extended nose Series 104.
Series 104 can easily be modified to mate with Series 250: Hansen 2HK, 3HK, and J639 Low-Side Fittings. Please contact PCU Engineering for Custom Series 104 to meet your application.

Production Control Units, Inc.

2280 West Dorothy Lane, Dayton, Ohio 45439-1892 Phone (937) 299-5594 FAX: (937) 299-4843

Web: www.pcuinc.com

01-17-13

Series 130
Valve Block

FEATURES

- Universal Valve Block for various applications.
- High vacuum and fluid and oil flow rates
- Air operated poppet valves
- Lightweight
- Separate fluid and oil vacuum connections
- Easy Valve Body Maintenance

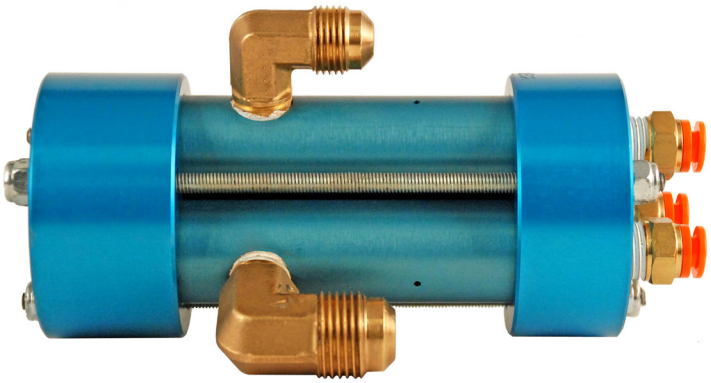

The Series 130 Valve Block Tool is the interface between a manual or automatic clamping mechanism and the fill system. Standard design includes a 3/8" NPT female connection for any manual coupler, power coupler or an automatic clamping mechanism. Refer to product bulletins, PB47 for manual coupler; and PB 49 for power coupler series 130 designs.

The Series 130 Valve Block Tool is designed to operate with Mass Flowmeter Fill System. Tools with automatic clamping are available. Please contact PCU for further information.

The tool contains three separate fluid circuits, controlled by air pilot pressure, which may be used for vacuum, refrigerant, salvage, oil, or any other fluid.

Save money with the PCU Series 130 Valve Block Tool. Contact our Order Department at (1-937-299-5594) with your application and equipment specifications.

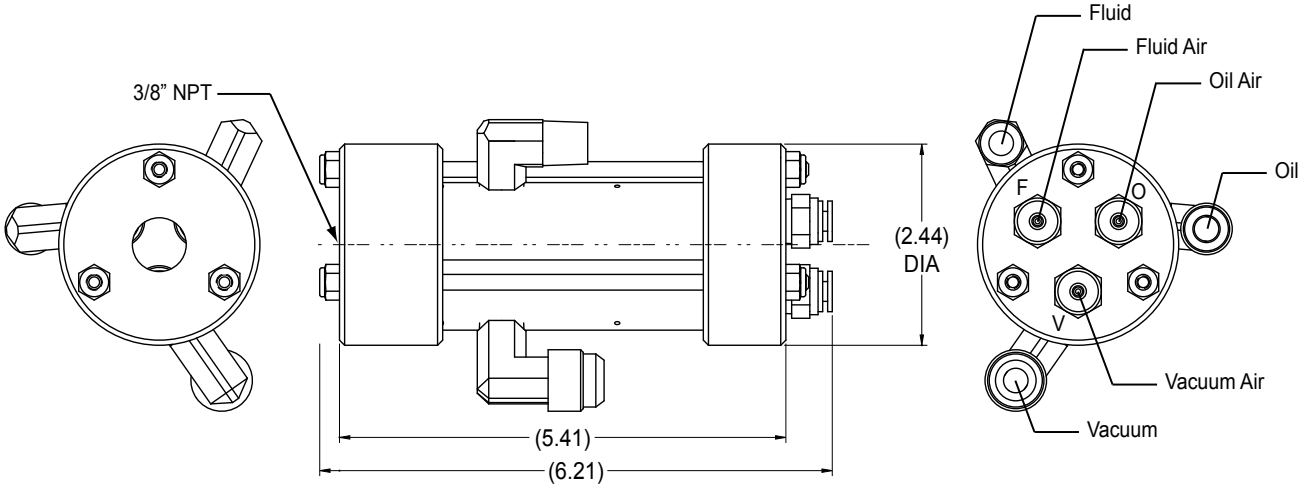

(3 valve design shown, please contact PCU Engineering for 4 valves and larger.)

Part Number 1 3 0 0 7 7 _

Series 130

Valve Block

No. of Valves	Stem	O-Ring Compounds
3	**0** = No Stem	**1** = Neoprene
4	**1** = With Stem	**2** = Buna-n (Nitrile)
5		**3** = Fluorocarbon
6		6 = EPDM

STANDARD STOCK PART NUMBER: 130077-302

TECHNICAL SPECIFICATIONS:

Weight . . . . . .2 lbs (0.91 kg)
Vacuum range . . . . . 0–760 TORR (0–760 mmHg)

Max Refrigerant Pressure . . .200 psig @ 70 psi air
. . . . . .300 psig @ 80 psi air
. . . . . .400 psig @ 90 psi air
. . . . . .500 psig @ 100 psi air

Vacuum port fitting. . . . . 1/2" JIC flare
Fluid. . . . . 1/4" NPT Male
Oil Port Fitting . . . . . 3/8" SAE flare
Air pilots. . . . . .(Vacuum, Fluid, Oil)
Air supply pressure . . . . . 70 PSIG (4.9 kg/cm^2)

Air port fittings . . . . 1/4" dia. one touch connectors

Tool Valve Block Flow Capacity (Fluid, Vacuum, Oil)
. . . . . .1.3Cv (Typical)

Process fitting compatibility . . . . . 3/8" NPT

PATENTS:
Patent Pending

* For other configurations and multiple poppet valves, please contact PCU Engineering for dimensions and availability.

Production Control Units, Inc.
2280 West Dorothy Lane, Dayton, Ohio 45439-1892 Phone (937) 299-5594 FAX: (937) 299-4843
 Web: www.pcuinc.com

Series 130
Evacuation & Refrigerant Charging Tool
With Manual Coupler

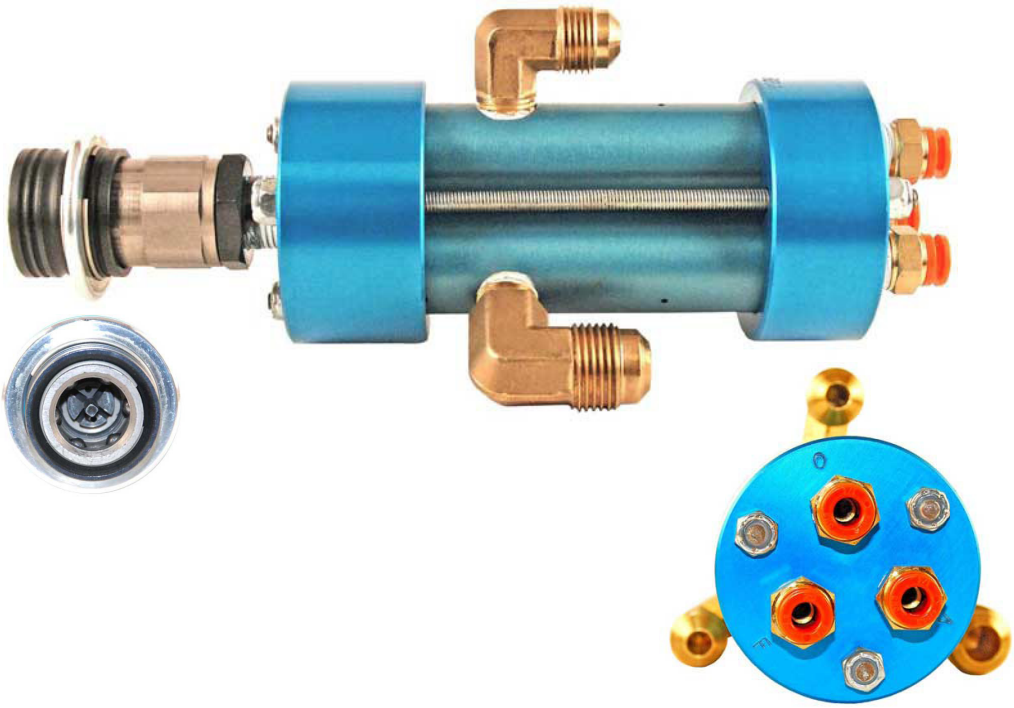

FEATURES

- Minimum refrigerant loss
- Manual connection force
- Manual operation, upon connection to fitting
- High vacuum and refrigerant and oil flow rates
- Air operated poppet valves
- Lightweight
- Separate Refrigerant and oil vacuum connections

Reduce labor content and minimize emission of refrigerant to the atmosphere!

The Series 130 Charging Tool is the interface adapter for a refrigerant/oil charging system. It is designed for direct connection to quick-connect HFC-134a A/C high-side process fittings for evacuation and refrigerant/oil charging, with de minimis refrigerant loss to atmosphere.

Tool valve operation is controlled automatically after the operator manually clamps BalLoc coupler on the process fitting and starts cycle. Charging machine cycle includes evaluation, vacuum check, and refrigerant charging. After cycle completion, the operator will remove BalLoc coupler by pulling on sleeve to release BalLoc clamping.

The manual clamping mechanism used is the time proven BalLoc method. The eight hardened steel balls which are constrained in the charge gate body are secured onto the ball groove taper on the process fitting by the locking sleeve. Securing the balls on the taper assures positive force on the nose seal.

The Series 130 Charging Tool is designed to operate with Mass Flowmeter Refrigerant Charging System. Tools with automatic clamping are available. Please contact PCU for further information.

The tool contains three separate fluid circuits, controlled by air pilot pressure, which may be used for vacuum, refrigerant, salvage, oil, or any other fluid.

Save money with the PCU Series 130 Charging Tool. Contact our Order Department at (1-937-299-5594) with your application and equipment specifications.

Series 130 Evacuation & Refrigerant Charging Tool with Manual Coupler

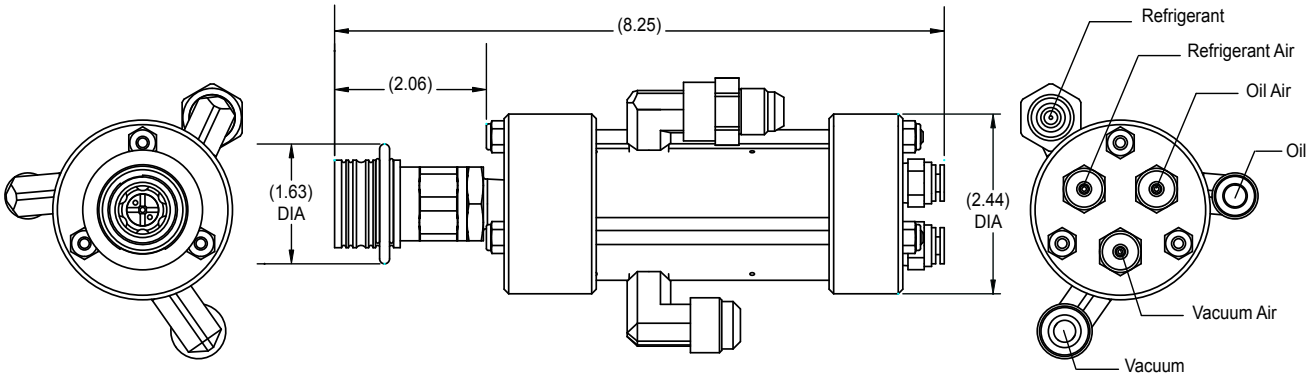

* For other configurations and multiple poppet valves, please contact PCU Engineering for dimensions and availability.

Part Number **1 3 0** —

Series 130

Manual Coupler

1 8 6 = Low-Side J639
1 8 7 = High-Side J639
0 5 0 = Series 250
0 4 1 = Series 410

Charge Size (At 200 PSI)

0 5 0 = 50 g/sec
0 7 0 = 70 g/sec
2 0 0 = 200 g/sec

STANDARD STOCK PART NUMBER: 130187-050 (50 g/sec) (At 200 PSI)

Refer to PB049 for Series 130 Power Coupler.

TECHNICAL SPECIFICATIONS:

Weight . . . . . .2.4 lbs (1.09 kg)
Vacuum range . . . . . 0–760 TORR (0–760 mmHg)
Refrigerant. HFC-134a
Opens with pressure air @ 70 psig
Oil . . . . . Polyolester or PAG
Opens with pressure air @ 70 psig
Standard Charge Rate. . . . . .50 g/s
Max Refrigerant Pressure . . .200 psig @ 70 psi air
. . . . . .300 psig @ 80 psi air
. . . . . .400 psig @ 90 psi air
. . . . . .500 psig @ 100 psi air
Vacuum port fitting. . . . . 1/2" JIC flare
Refrigerant. . . . . 3/8" JIC flare
Oil Port Fitting . . . . . 3/8" SAE flare
Air pilots. . . . . .(Vacuum, Refrigerant, Oil)

Air supply pressure . . . . . 70 PSIG (4.9 kg/cm^2)
Air port fittings . . . . 1/4" dia. one touch connectors
Tool Valve Block Flow Capacity (Refrig., Vacuum, Oil). . . . . .
. . . . . .0.9cv (Typical)
Process fitting compatibility . . . . . .SAE J639
Process fitting nose seal . . . . . .O-Ring
Process fitting clamp system. . . . . .PCU BalLoc
Oil compatibility . . . . . Polyolester or PAG

Manual Coupler P/N

186	=	86VT311
187	=	87VT331FL
050	=	62VT337FL
041	=	67VT337

Production Control Units, Inc.

2280 West Dorothy Lane, Dayton, Ohio 45439-1892 Phone (937) 299-5594 FAX: (937) 299-4843

Web: www.pcuinc.com

Series 130
Evacuation & Refrigerant Charging Tool
With Power Coupler

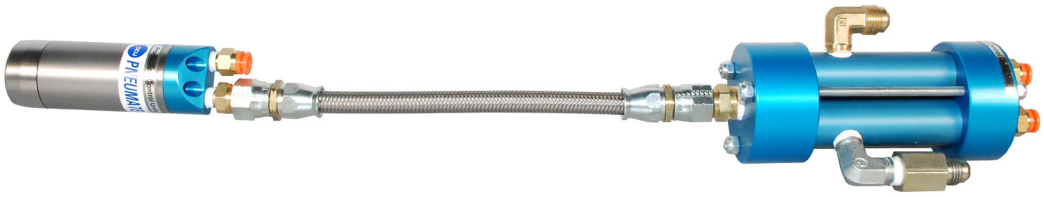

FEATURES

- Minimum refrigerant loss
- Minimal connection force
- Semi-Automatic operation, upon connection to fitting
- High vacuum and refrigerant and oil flow rates
- Air operated poppet valves
- Lightweight
- Separate Refrigerant and oil vacuum connections

Reduce labor content and minimize emission of refrigerant to the atmosphere!

The Series 130 Charging Tool is the interface adapter for a refrigerant/oil charging system. It is designed for direct connection to quick-connect HFC-134a A/C high-side process fittings for evacuation and refrigerant/ oil charging, with de minimis refrigerant loss to atmosphere.

Tool valve operation is controlled automatically after the operator positions power coupler on the process fitting and starts cycle. Charging machine cycle includes evaluation, vacuum check, and refrigerant charging. After cycle completion, power coupler will automatically unclamp and operator will remove from high side fitting.

The Power Coupler clamping mechanism used is the time proven Ball Lock method. The eight hardened steel balls which are constrained in the charge gate body are secured onto the ball groove taper on the process fitting by the locking sleeve. Securing the balls on the taper assures positive force on the nose seal.

The Series 130 Charging Tool is designed to operate with Mass Flowmeter Refrigerant Charging System. Tools with automatic clamping are available. Please contact PCU Engineering for further information.

The tool contains three separate fluid circuits, controlled by air pilot pressure, which may be used for vacuum, refrigerant, salvage, oil, or any other fluid.

Save money with the PCU Series 130 Charging Tool. Contact our Order Department at (1-937-299-5594) with your application and equipment specifications.

Series 130 Evacuation & Refrigerant Charging Tool With Power Coupler

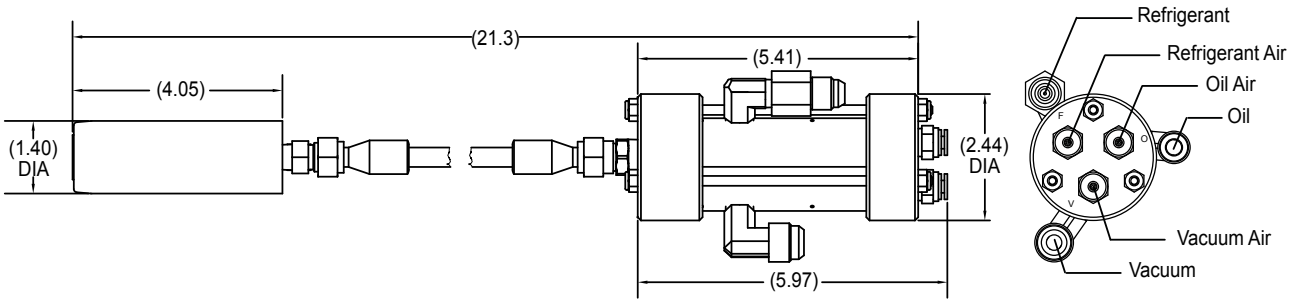

* Power coupler 086 & 087 shown for other configurations and multiple poppet valves, please contact PCU Engineering for dimensions and availability.

Part Number 1 3 0 _

Series 130

Power Coupler

0 8 6 = Low-Side J639
0 8 7 = High-Side J639
2 5 0 = Series 250
2 5 2 = Hansen 2HK
2 5 3 = Hansen 3HK
2 5 4 = Hansen 4HK
4 1 0 = Series 410

Charge Size (at 200 PSI)

0 5 0 = 50 g/sec
0 7 0 = 70 g/sec

STANDARD STOCK PART NUMBER: 130087-050 (50 g/sec)

Refer to PB047 for Series 130 with Manual Coupler

TECHNICAL SPECIFICATIONS:

Weight . . . . . .3.6 lbs (1.6 kg)
Vacuum range . . . . . 0–760 TORR (0–760 mmHg)
Refrigerant. HFC-134a
Opens with pressure air @ 70 psig
Oil . . . . . Polyolester or PAG
Opens with pressure air @ 70 psig
Standard Charge Rate. . . . . .50 g/s
Max Refrigerant Pressure . . .200 psig @ 70 psi air
. . . . . .300 psig @ 80 psi air
. . . . . .400 psig @ 90 psi air
. . . . . .500 psig @ 100 psi air
Vacuum port fitting. . . . . 1/2" JIC flare
Refrigerant. . . . . 3/8" JIC flare
Oil Port Fitting . . . . . 3/8" SAE flare
Power Coupler. . . . . Low-Side 109006-001
. . . . . .High-Side 102750-001

Air pilots. . . . . .(Vacuum, Refrigerant, Oil)
Air supply pressure . . . . . 70 PSIG (4.9 kg/cm^2)
Air port fittings . . . . 1/4" dia. one touch connectors
Tool Valve Block Flow Capacity (Refrig., Vacuum, Oil)
. . . . . .0.36Cv (Typical) for low-side
. . . . . 0.41Cv (Typical) for hi-side
Process fitting compatibility. . . . . .SAE J639
Process fitting nose seal . . . . . .Molded Seal
Process fitting clamp system. . . . . .PCU BalLoc
Oil compatibility . . . . . Polyolester or PAG

PATENTS:

Patent Pending

Production Control Units, Inc.

2280 West Dorothy Lane, Dayton, Ohio 45439-1892 Phone (937) 299-5594 FAX: (937) 299-4843

Web: www.pcuinc.com

Series 130
Evacuation & Refrigerant Charging Tool
with Manual Coupler for 1/4" Schrader Fitting

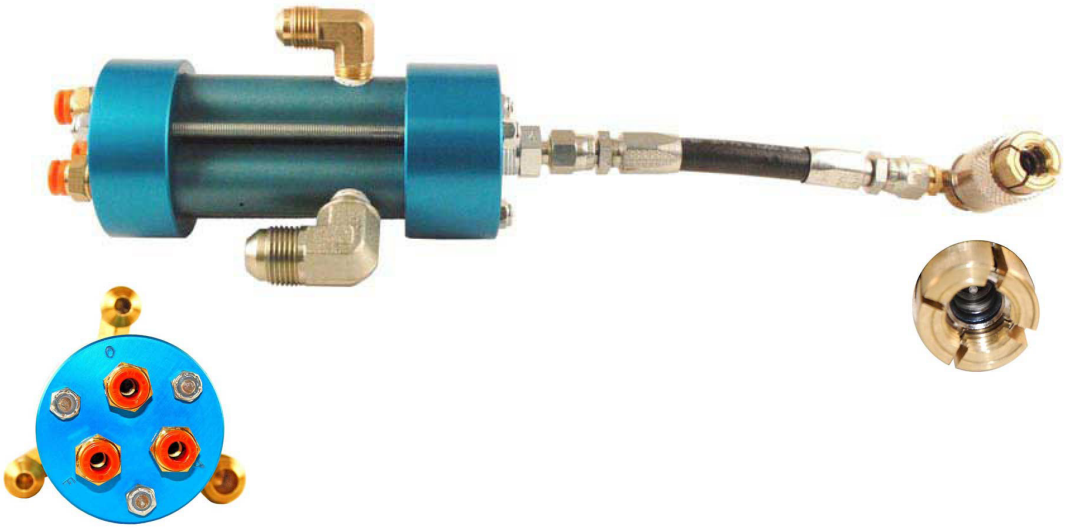

FEATURES

- Minimum refrigerant loss
- Manual connection force
- Manual operation, upon connection to fitting
- High vacuum and refrigerant and oil flow rates
- Air operated poppet valves
- Lightweight
- Separate Refrigerant and oil vacuum connections
- Connects to 1/4 flare fitting with Schrader core

Reduce labor content and minimize emission of refrigerant to the atmosphere!

The Series 130 Charging Tool is the interface adapter for a refrigerant/oil charging system. It is designed for direct connection to 1/4 flare thread with Schrader core process fittings for evacuation and refrigerant/oil charging, with de minimis refrigerant loss to atmosphere.

Tool valve operation is controlled automatically after the operator positions coupler on the process fitting and starts cycle. Charging machine cycle includes evaluation, vacuum check, and refrigerant charging. The operator will remove coupler by pulling on sleeve to release clamping.

The Series 130 Charging Tool is designed to operate with Mass Flowmeter Refrigerant Charging System. Tools with automatic clamping are available. Please contact PCU for further information.

The tool contains three separate fluid circuits, controlled by air pilot pressure, which may be used for vacuum, refrigerant, salvage, oil, or any other fluid.

Save money with the PCU Series 130 Charging Tool. Contact our Order Department at (1-937-299-5594) with your application and equipment specifications.

Series 130 Evacuation & Refrigerant Charging Tool with Manual Coupler for 1/4" Schrader Fitting

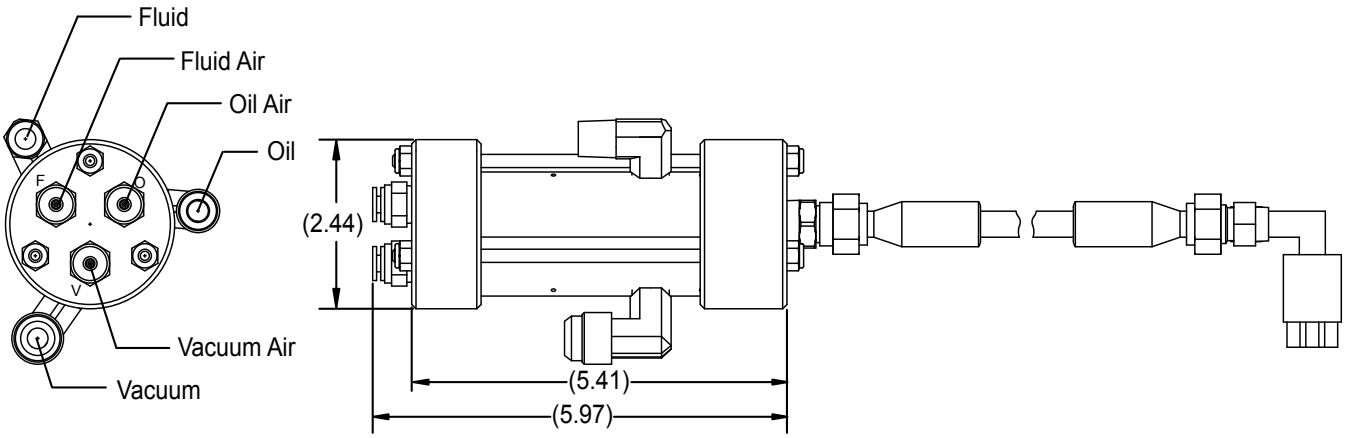

* For other configurations and multiple poppet valves, please contact PCU Engineering for dimensions and availability.

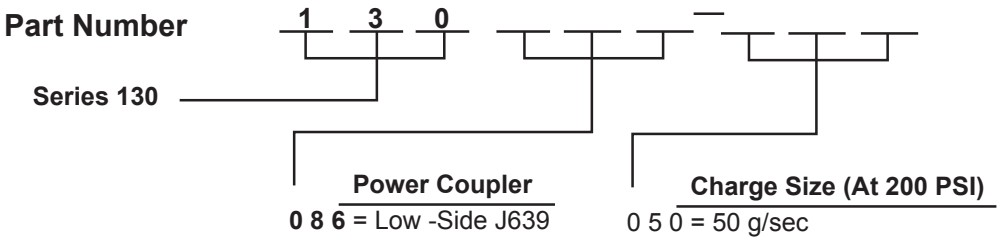

Refer to PB047 for Series 130 with Manual Coupler and PB049 for Series 130 with Power Coupler.

TECHNICAL SPECIFICATIONS:

Weight . . . . . .2.6 lbs (1.18 kg)
Vacuum range . . . . . 0–760 TORR (0–760 mmHg)
Refrigerant. HFC-134a
Opens with pressure air @ 70 psig
Oil . . . . . Polyolester or PAG
Opens with pressure air @ 70 psig
Standard Charge Rate. . . . . .50 g/s
Max Refrigerant Pressure . . .200 psig @ 70 psi air
. . . . . .300 psig @ 80 psi air
. . . . . .400 psig @ 90 psi air
. . . . . .500 psig @ 100 psi air
Vacuum port fitting. . . . . 1/2" JIC flare

Refrigerant. . . . . 3/8" JIC flare
Oil Port Fitting . . . . . 3/8" SAE flare
Air pilots. . . . . .(Vacuum, Refrigerant, Oil)
Air supply pressure . . . . . 70 PSIG (4.9 kg/cm^2)
Air port fittings . . . . 1/4" dia. one touch connectors
Tool Valve Block Flow Capacity (Refrig., Vacuum, Oil). . . . . .
. . . . . .0.9Cv (Typical)
Process fitting compatibility1/4 Flare Schrader Valve
Process fitting nose seal . . . . . .O-Ring
Oil compatibility . . . . . Polyolester or PAG

Production Control Units, Inc.

2280 West Dorothy Lane, Dayton, Ohio 45439-1892 Phone (937) 299-5594 FAX: (937) 299-4843

Web: www.pcuinc.com

01-17-13

Series 300
Evacuation & Refrigerant Charging Tool

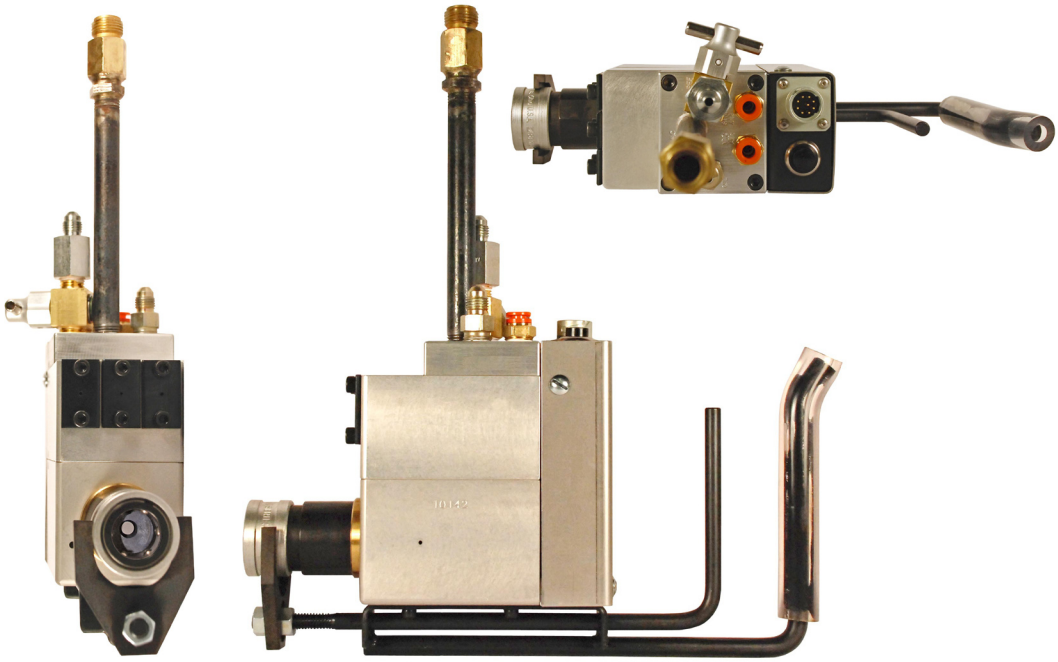

FEATURES

- Minimum refrigerant loss
- Manual disconnect
- High vacuum & refrigerant flow rates
- Lightweight
- Connection to J639 High-Side fitting
- Relief style refrigerant & oil valve
- Air operated vacuum valve
- Easily adapted to different style process fittings
- Easily modified for multiple refrigerants
- Optional selector switch for multiple charge size
- Independent stem operation
- Scavenge optional

The PCU Series 300 A/C Charging Tool is part of an automated charging system designed to process the A/C system on appliances and vehicles. The system normally consists of a charger which provides a fast precise method of dispensing refrigerant, along with product vacuum checking prior to charging. A line accumulator and/or booster pump which maintain a consistent refrigerant supply.

The automatic 3 valve charging tool, hose, and control cable assembly permits tool connection evacuation, automatic process coupler valve actuation, unit vacuum checking as well as refrigerant and oil charging through a single connection to the product.

The tool oil and refrigerant valves are of the relief type they open and close in accordance with fluid pressure as provided by the charger. The vacuum valve and process coupler valve actuator are operated by spring backed air pistons. The tool is normally adapted for use with the PCU series 250 process coupler. However other process couplers are available. This tool is electrically heated and thermostatically controlled at a temperature of 112˚F (33˚C) to prevent condensation of moisture on the coupler and to force refrigerant liquid from the connector into the unit at the end of the cycle. The charging machine cycle "Start" switch is usually mounted on the tool assembly and tool is normally supported by a tool balancer.

To operate the tool, the operator squeezes the handles, positions the tool on the process fitting and releases the handles, and then depresses the cycle "Start pushbutton on the tool. Afterwards the evacuation cycle, vacuum check and refrigerant charging takes place automatically.

Contact our Order Department (1-937-299-5594) with your application and equipment specifications.

Series 300 Evacuation & Refrigerant Charging Tool

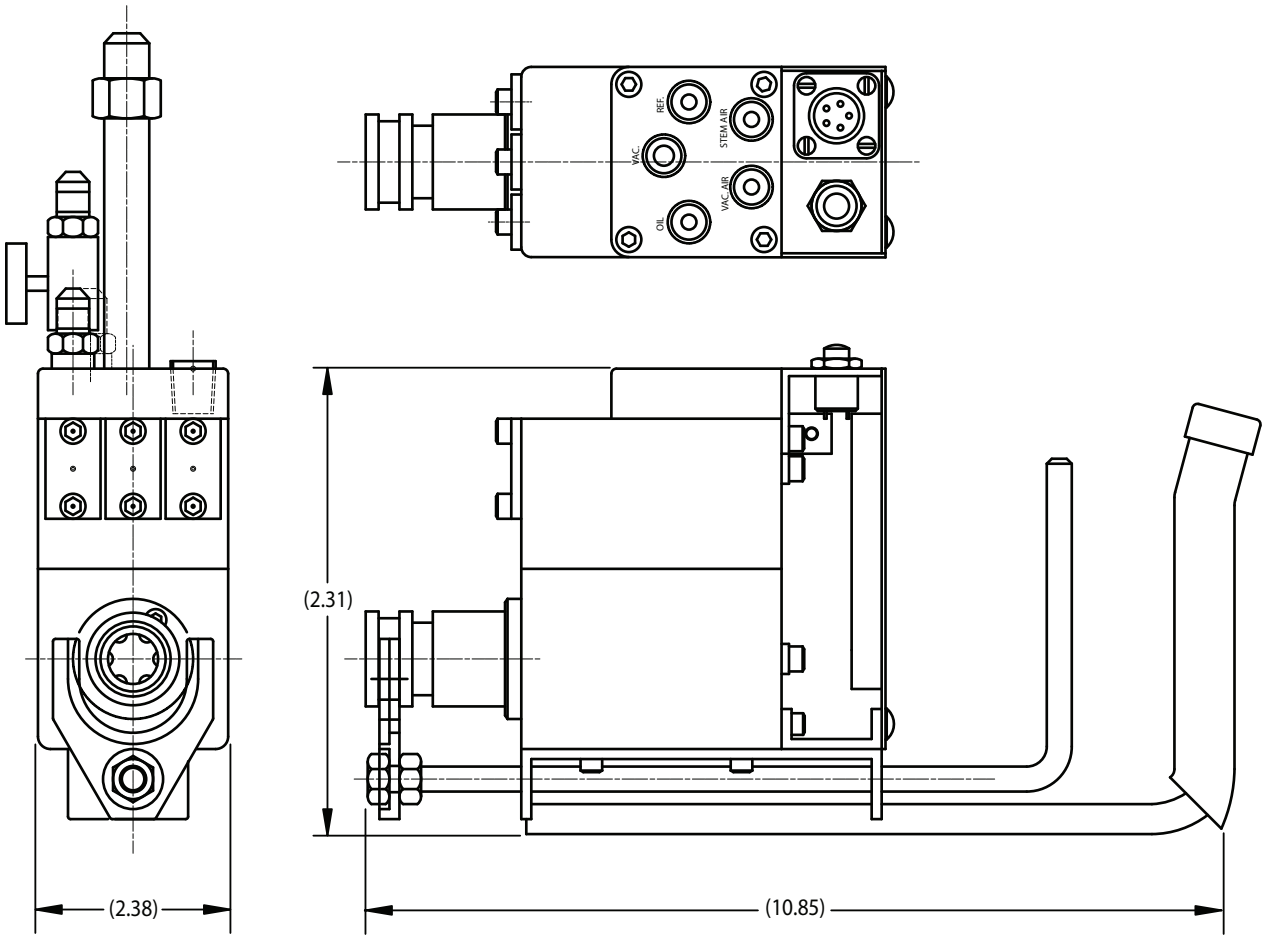

TECHNICAL SPECIFICATIONS:

Weight . . . . . .7.2 lbs (3.27 kg)

Vacuum range . . . . . 0–760 TORR (0–760 mmHg)
Vacuum port fitting . . . . . 1/2" SAE

Refrigerant port fitting . . . . . 1/4" SAE

Min. Oil Charge Pressure. . . . . .480 PSIG
Min. Refrigerant Charge Pressure . . . . . .480 PSIG

Air pilots . . . . . (Vacuum & Stem air)
Air supply pressure . . . . . 60 PSIG (4.2 kg/cm^2)
Stem Air port fittings . . . . . .1/4" SAE FL
(Optional 1/4" Dia one touch fittings)

Process fitting compatibility . . . . . Series 250
(Optional Series 410 Hansen 2HK, 3HK, 4HK)
Process fitting nose seal . . . . . .O-Ring
Process fitting clamp system . . . . . .PCU BalLoc

Oil compatibility. . . . . Polyolester or PAG

Electrical Connection . . . . 9 or 12 Pin Receptacle

Production Control Units, Inc.

2280 West Dorothy Lane, Dayton, Ohio 45439-1892 Phone (937) 299-5594 FAX: (937) 299-4843

Web: www.pcuinc.com

03-11-10

Series 106
Radiator Fill Tool

FEATURES

- Simple attachment
- Air operated valve
- Dry evacuation circuit
- Drip free operation
- High vacuum flow rate
- High coolant flow rate
- Automated disconnect
- Fail safe operation
- Rugged & durable construction
- Easily maintained
- Light Weight

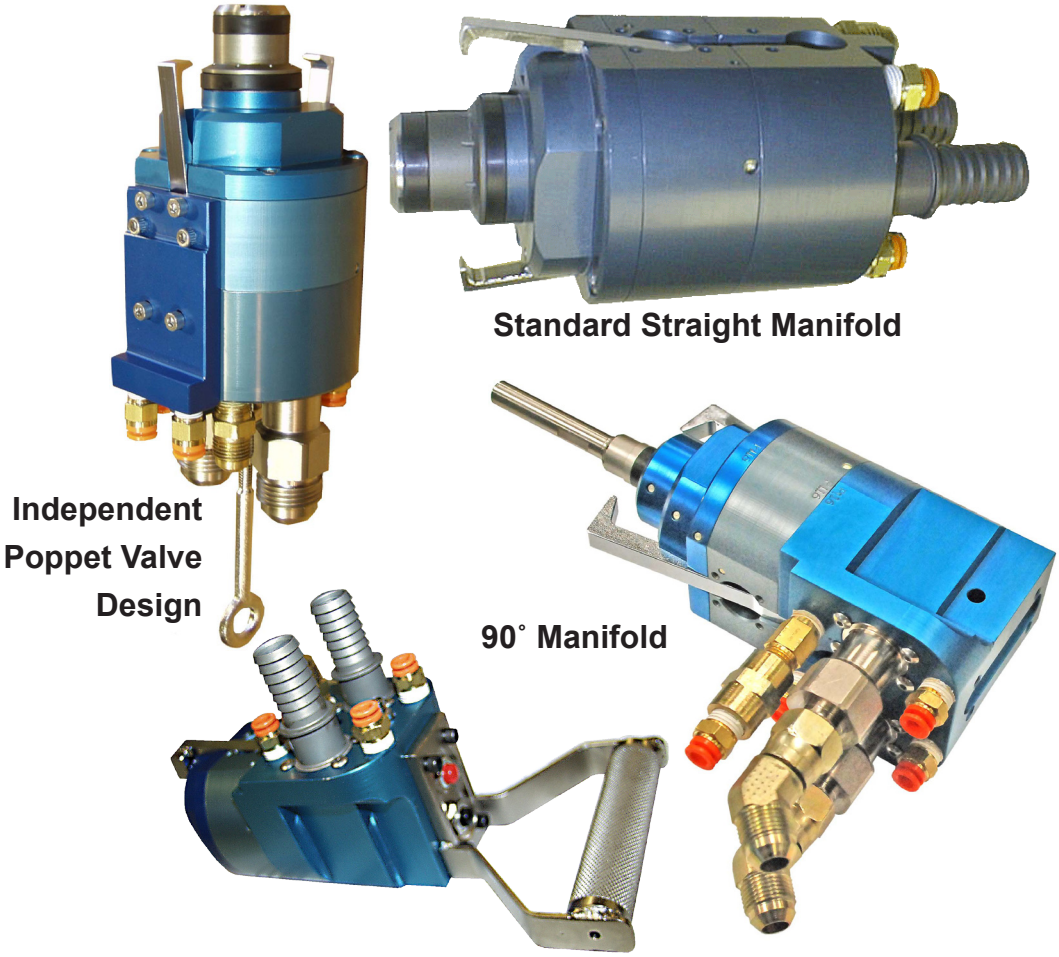

The PCU Compufill Series 106 Radiator Fill Tool connects to engine cooling systems for evacuation and filling. This tool adapts the filling equipment to the cooling system.

The PCU Compufill Series 106 tool can be operated in conjunction with all PCU and other compatible radiator fill machines. This series of tools includes models which can be attached to most common radiator fill necks and surge tank inlets.

Typical tool operation is semi-automatic in that the operator has only to locate the tool onto the fill neck. Upon initiation of the fill cycle, the tool, under control of the fill machine will automatically seat and seal in order that the evacuation, leak check, filling, and fill quality operation can proceed. Upon completion of these operations, the tool unseats and can then be retracted. All models are designed to provide minimum drip operation.

The PCU Compufill Series 106 tool provides flexibility from manual operations to those which are fully automated when attached to an tool presentation arm.

Series 106 tools can be easily modified for power steering, fuel, and transmission applications. Contact our Order Department at (1-937-299-5594) for your application requirements.

Series 106 Radiator Fill Tool

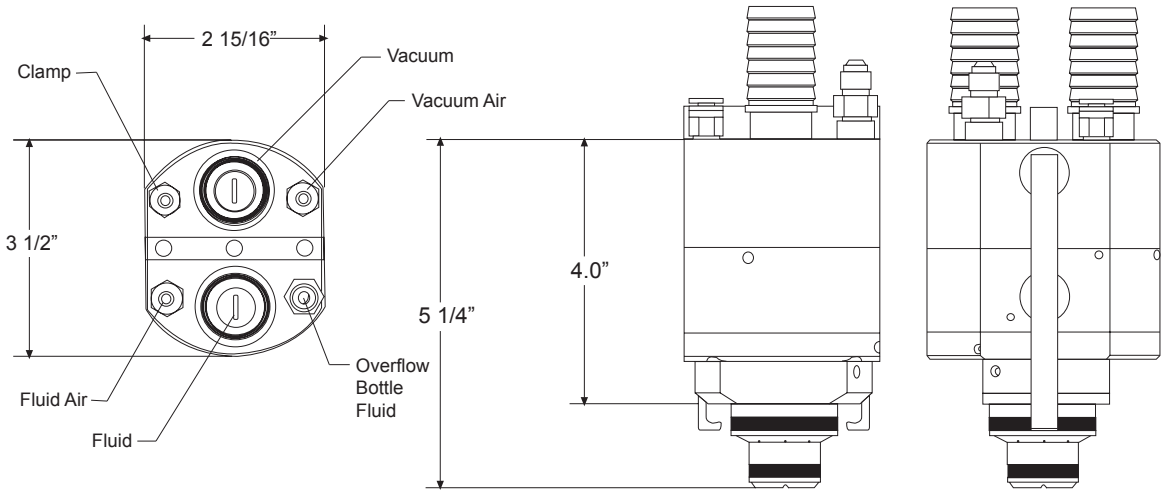

- Tools can be used with PCU tool presentation arms for manual connect - pick and place - semi-auto attachment to vehicle reservoirs.
- Fits large and small radiator necks and all size surge tanks.
- Large internal porting for high flow rate.
- Tool designs for volume or pressure fill.
- Tools are built with spring returns on the valve ports for fail-safe operation during power loss.
- Tool design includes the ability to fill the overflow bottle during the normal cycle.
- All phases of evacuation and fill cycle internal to tool are automatically controlled by the evacuate and fill machine.
- Tools are compatible for operation with programmable logic, relay, or computer based control systems.
- Interfaces to the Compufill Series 106 tool include clamp, seal and valve control air, coolant mixture and vacuum.
- A robust design and durable construction work well in a constant use production environment.
- Aluminum and stainless steel construction are used to minimize weight and eliminate corrosion.

TECHNICAL SPECIFICATIONS:

Weight . . . . . .3.25 lbs (1.5 kg)

Fluid. . . . . Engine Coolant

Fluid/Vacuum Port Fitting . . . . . 1/2", 3/4", or 1" Barbed Hose

Air Supply Pressure. . . . .60 psig (4.2 kg/cm^2) Min.

Air Port Fitting . . . 1/4" Dia. one Touch Connectors

Flow Capacity
Fluid or Vacuum. . . . . 9.3 Cv Typical
Overflow . . . . . 0.7 Cv Typical

Maximum Fluid Pressure. . . . . 50 psi

Radiator/Surge Tank . . . . . Common sizes for Rad & Surge Tanks

Tool Flow Rates:
(Based on Standard Design)

25 PSI (1.75kg/cm)		
Hose	L/ sec	GPM
3/4"	1.58	25.1
1"	1.74	27.6

PATENTS:

This tool is manufactured under U.S Patent No. 6,257,285.

Production Control Units, Inc.

2280 West Dorothy Lane, Dayton, Ohio 45439-1892 Phone (937) 299-5594 FAX: (937) 299-4843

Web: www.pcuinc.com

01-02-13

Series 114
Brake Fill Tool

FEATURES

- Simple attachment
- Air operated valves
- Dry evacuation circuit
- Drip free operation
- High vacuum flow rate
- High fluid flow rate
- Automated disconnect
- Fail safe operation
- Rugged & durable construction
- Easily maintained
- Light Weight
- Optional handle for 2 hand operation

Standard 90˚ Manifold

Optional Handle
With Pushbuttons

Optional Straight Manifold

The PCU Compufill Series 114 Brake Fill Tool connects to brake master cylinder reservoirs for evacuation and filling. This tool adapts the filling equipment to the brake system.

This series of tools includes models which can be attached to most common brake fill necks and can be customized for other applications.

Typical tool operation is semi-automatic in that the operator has only to locate the tool onto the fill neck. Upon initiation of the fill cycle, the tool, under control of the fill machine will automatically clamp and seal in order that the evacuation, leak check, filling, and scavenges cycle can proceed. Upon completion of these operations, the tool unclamps and can then be removed. All models are designed to provide minimum drip operation.

The PCU Compufill Series 114 tool provides flexibility from manual operations to those which are fully automated when attached to a tool presentation arm.

Series 114 Brake Fill Tool

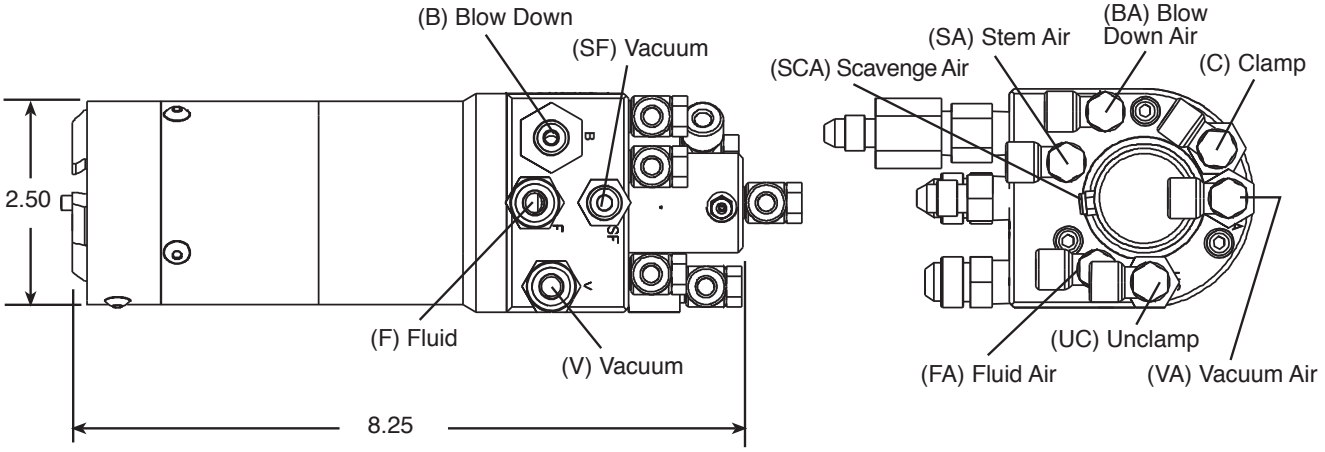

- Designed for two different scavenge levels.
- Scavenge flow path is independent of fluid or vacuum circuit.
- Tool designed with secondary shutoff value for dripless operation.
- Tools can be used with PCU tool presentation arms for manual connect - pick and place - semi-auto attachment to vehicle reservoirs.
- Fits large and small brake necks.
- Internal porting for higher flow rate
- Tool designs for volume or pressure fill.
- Tools are built with spring returns on the valve ports for fail-safe operation during power loss.
- All phases of evacuation and fill cycle internal to tool are automatically controlled by the evacuate and fill machine.
- Tools are compatible for operation with programmable logic, relay, or computer based control systems.
- A robust design and durable construction work well in a constant use production environment.
- Aluminum and stainless steel construction are used to minimize weight and eliminate corrosion.
- Tool designed with independent blowdown circuit for fluid circuit clean out.
- Optional straight or 90° manifolds.

TECHNICAL SPECIFICATIONS:

Weight . . . . . 4.25 lbs (2 kg)

Fluid. . . . . Brake Fluid
Fluid & Vacuum Port Fitting. . . . . 3/8" JIC

Scavenge & Blowdown Port Fitting. . . . . 1/4" JIC

Air Supply Pressure. . . . .70 psig (4.9 kg/cm^2) Min.

Air Port Fitting . . . 1/4" Dia. one Touch Connectors

Flow Capacity
Fluid or Vacuum or Air Blowdown. 0.82 Cv Typical

Maximum Fluid Pressure. . . . . .150 psi

Flow Rates: DOT 3 Brake Fluid

3/8" Hose		
Fill Pressure	**L/sec**	**GPM**
70 PSI (4.8 BAR)	0.2	3
90 PSI (6.2 BAR)	0.24	3.8

Production Control Units, Inc.
2280 West Dorothy Lane, Dayton, Ohio 45439-1892 Phone (937) 299-5594 FAX: (937) 299-4843

Web: www.pcuinc.com

03-10-10

Series 125
Manual Brake Fill Tool

FEATURES

- Simple manual attachment
- Air operated valves
- Dry evacuation circuit
- Drip free operation
- High vacuum flow rate
- High fluid flow rate
- Fail safe operation
- Rugged & durable construction
- Easily maintained
- Light Weight

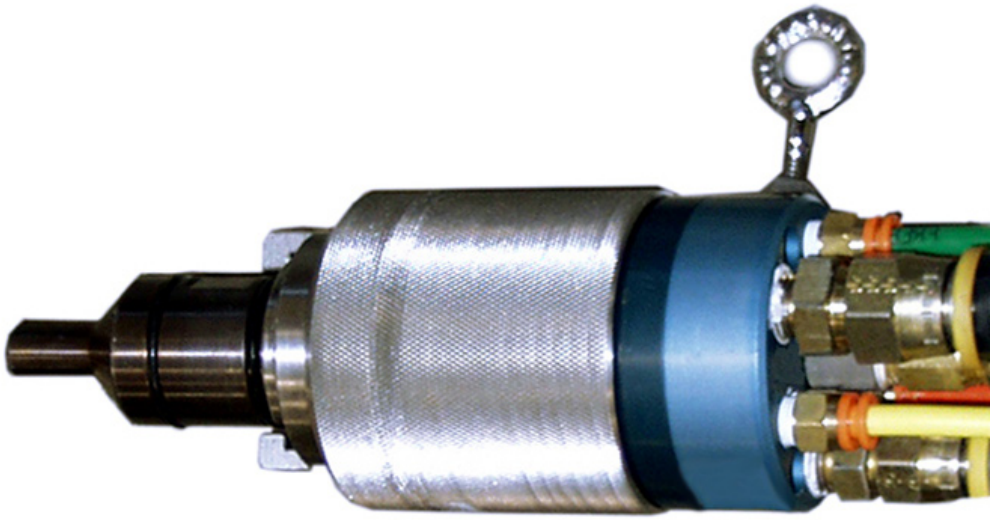

The PCU Compufill Series 125 Brake Fill Tool connects to brake master cylinder reservoirs for evacuation and filling. This tool adapts the filling equipment to the brake system.

This series of tools includes models which can be attached to most common brake fill necks and can be customized for other applications.

Typical tool operation is semi-automatic in that the operator inserts tool into reservoir and manually rotates sleeve to clamp and seal. Once the cycle start button is pressed, the system will control the air piloted valves for evacuation, leak check, filling and scavenge cycle. Upon completion of these operations, the operator will manually rotate sleeve to unclamp. Tool is designed for minimum drip operation.

Series 125 Manual Brake Fill Tool

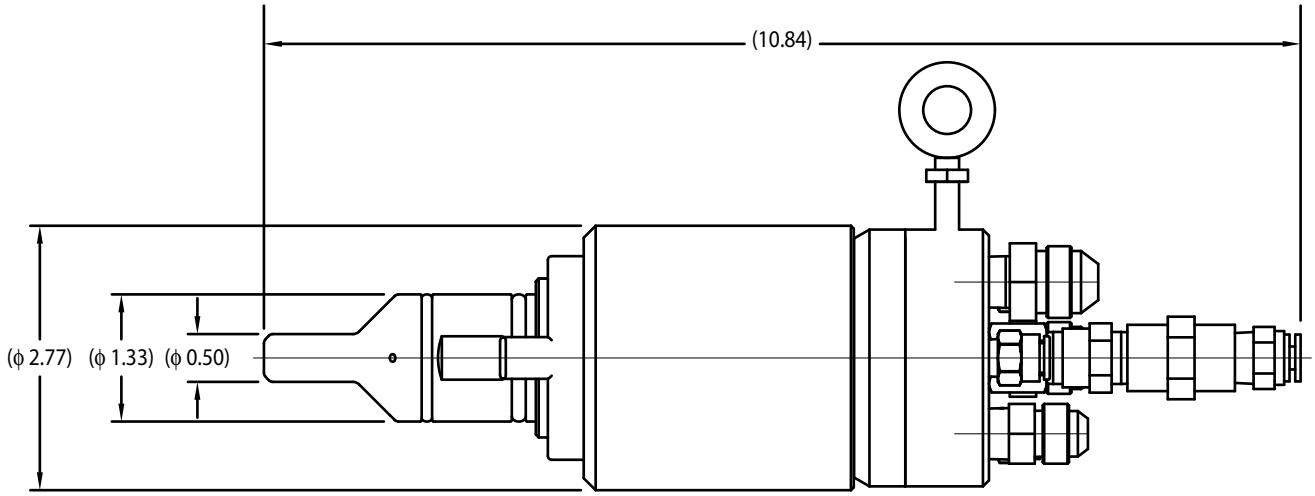

- Scavenge flow path is independent of fluid or vacuum circuit.
- Tool designed with secondary shutoff value for dripless operation.
- Refer to series 114 for auto clamp brake tool PB038.
- Fits large and small brake necks.
- Internal porting for higher flow rate.
- Tool designs for volume or pressure fill.
- Tools are built with spring returns on the valve ports for fail-safe operation during power loss.
- All phases of evacuation and fill cycle internal to tool are automatically controlled by the evacuate and fill machine.
- Tools are compatible for operation with programmable logic, relay, or computer based control systems.
- A robust design and durable construction work well in a constant use production environment.
- Aluminum and stainless steel construction are used to minimize weight and eliminate corrosion.
- Tool designed with independent blowdown circuit for fluid circuit clean out.
- Optional straight or 90° manifolds.

TECHNICAL SPECIFICATIONS:

Weight . . . . . 4.25 lbs (2 kg)

Fluid. . . . . Brake Fluid
Fluid & Scavenge Port Fitting . . . . . 3/8" JIC

Vacuum Port Fitting. . . . . 1/2" JIC

Blowdown Port Fitting. . . . . 1/4" DIA one touch connector

Air Supply Pressure. . . . .70 psig (4.9 kg/cm^2) Min.

Air Port Fitting . . . 1/4" Dia. one Touch Connectors

Flow Capacity
Fluid or Vacuum or Air Blowdown. 0.82 Cv Typical

Maximum Fluid Pressure. . . . . .150 psi

Flow Rates: DOT 3 Brake Fluid

3/8" Hose		
Fill Pressure	**L/sec**	**GPM**
70 PSI (4.8 BAR)	0.2	3
90 PSI (6.2 BAR)	0.24	3.8

Production Control Units, Inc.
2280 West Dorothy Lane, Dayton, Ohio 45439-1892 Phone (937) 299-5594 FAX: (937) 299-4843

Series 115
Transmission Fill Tool

FEATURES

- Simple attachment
- Air operated valve
- Drip free operation
- High fluid flow rate
- Fail safe operation
- Rugged & durable construction
- Easily maintained
- Light Weight

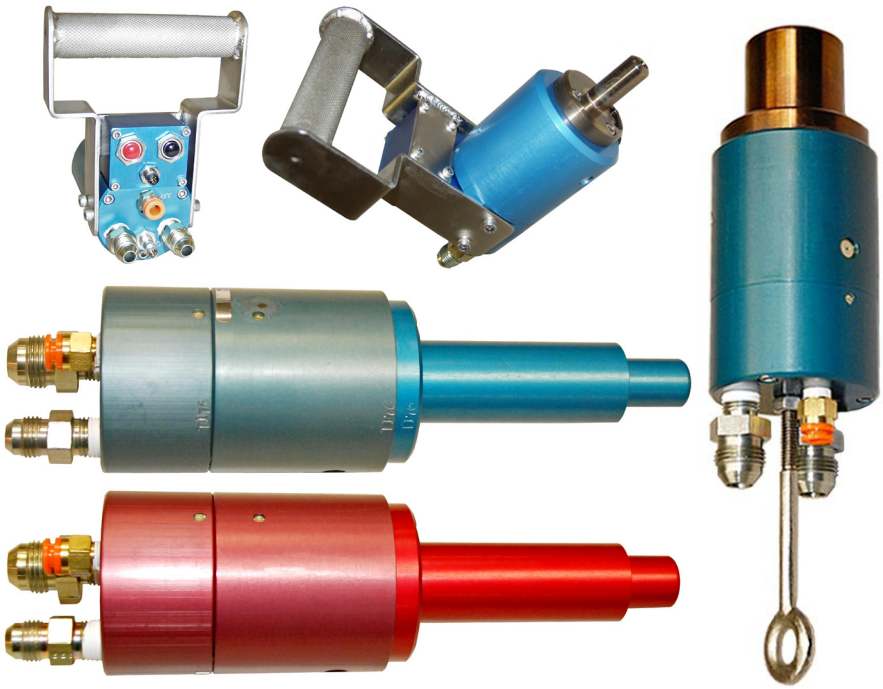

The PCU Compufill Series 115 Transmission Fill Tool connects to engine systems for filling. This tool adapts the filling equipment to the transmission system.

The PCU Compufill Series 115 tool can be operated in conjunction with all PCU and other compatible transmission fill machines. This series of tools includes models which can be attached to most transmission fill tubes or transmission threaded ports.

Typical tool operation is for the operator to locate the tool onto the transmission fill port and start cycle.

After filling, the fill machine will shut off fluid and open the valve for dripless operation. The operator can then remove the fill tool from the transmission system.

The PCU Compufill Series 115 tool provides flexibility from manual operations to those which are fully automated when attached to an tool presentation arm.

Series 115 tools can be easily modified to meet your application. Please contact our Order Department at (1-937-299-5594) for your application requirements.

Series 115 Transmission Fill Tool

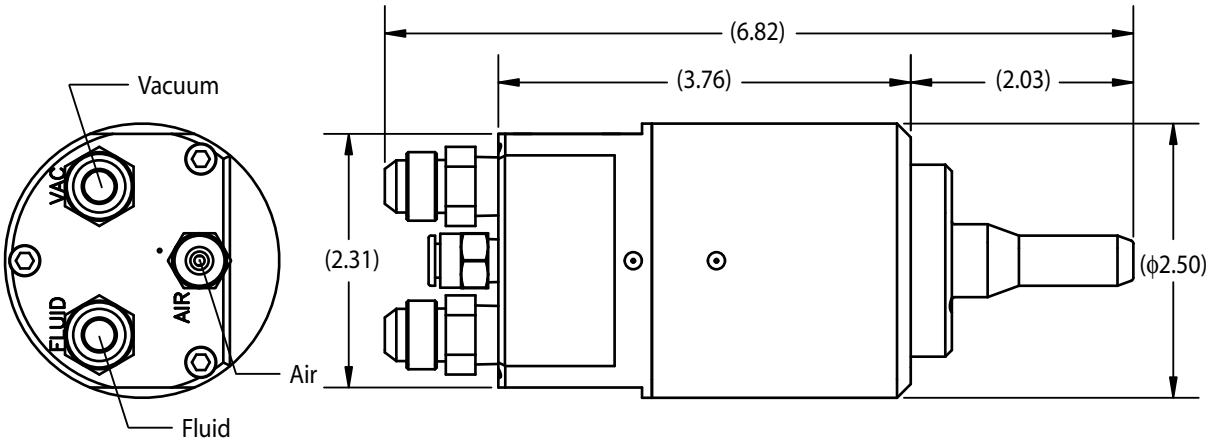

- Tools are used for manual connect - pick and place - semi-auto attachment to vehicle transmissions.
- Fits large and small transmission fill ports.
- Tool designs for volume fill.
- Tools are built with spring returns on the valve ports for fail-safe operation during power loss.
- Evacuation and fill cycle internal to tool are automatically controlled by the evacuate and fill machine.
- Tools are compatible for operation with programmable logic, relay, or computer based control systems.
- A robust design and durable construction work well in a constant use production environment.
- Aluminum and stainless steel construction are used to minimize weight and eliminate corrosion.

TECHNICAL SPECIFICATIONS:

Weight . . . . . 2 lbs (0.91 kg)	Flow Capacity Fluid . . . . . 0.9 Cv Typical Vacuum . . . . . 0.73 Cv Typical
Fluid. . . . . .Transmission Fluid	
Fluid/Dripless Port Fitting . . . . . 3/8" JIC	Typical Fluid Pressure . . . . . 50 to 150 psi
Air Supply Pressure. . . . .60 psig (4.2 kg/cm^2) Min.	
Air Port Fitting . . . .1/4" Dia. one Touch Connector	

Production Control Units, Inc.

2280 West Dorothy Lane, Dayton, Ohio 45439-1892 Phone (937) 299-5594 FAX: (937) 299-4843

Web: www.pcuinc.com

03-10-10

Series 117
Windshield Washer Tool

FEATURES

- Simple attachment
- Air operated valve
- Drip free operation
- High vacuum flow rate
- Fail safe operation
- Rugged & durable construction
- Easily maintained
- Light Weight

The PCU Compufill Series 117 Windshild Washer Fill Tool connects to the engine windshield washer bottle for filling.

The PCU Compufill Series 117 tool can be operated in conjunction with all PCU and other compatible windshield washer fill machines. This series of tools includes models which can be attached to most common fill necks.

Typical tool operation is that the operator has only to locate the tool onto the fill neck. Upon initiation of the fill cycle, the tool, under control of the fill machine will automatically open tool valve and fill reservior with a predetermined volume of fluid. Upon comletion, the operator removes the tool and places it back into the tool cup holder. All models are designed to provide minimum drip operation.

Series 117 tools can be easily modified to fit you applications. Contact our Order Department at (1-937-299-5594) for your application requirements.

Please contact PCU Engineering for further information.

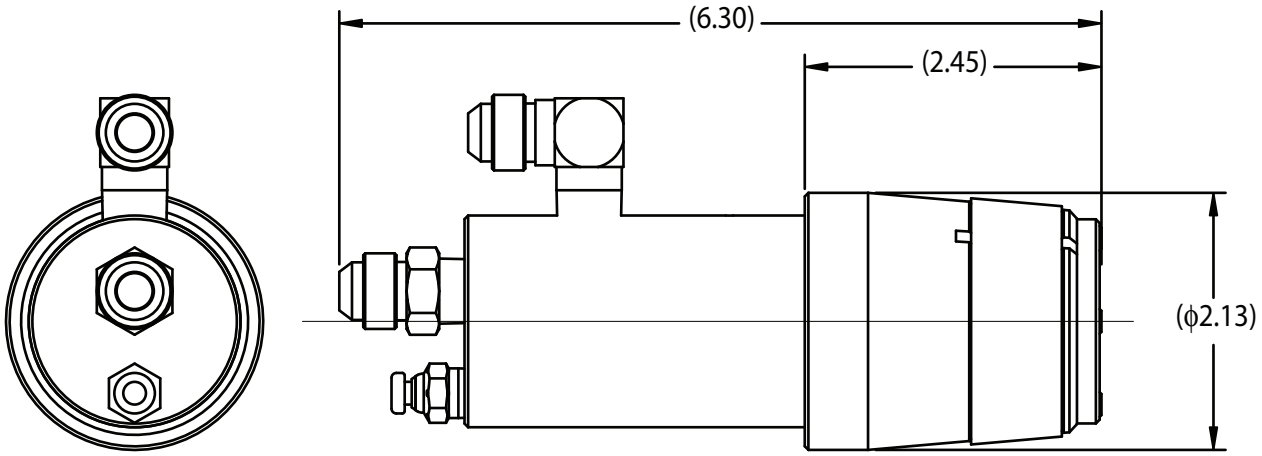

- Tools can be used with PCU tool presentation arms for manual connect - pick and place - semi-auto attachment to vehicle reservoirs.
- Fits large and small windshield washer necks.
- Large internal porting for high flow rate.
- Tool designs for volume fill.
- Tools are built with spring returns on the valve ports for fail-safe operation during power loss.
- All phases of fill cycle internal to tool are automatically controlled by the fill machine.
- Tools are compatible for operation with programmable logic, relay, or computer based control systems.
- Interface to the Compufill Series 117 tool include valve control air, fluid mixture, fluid vacuum and port for water and winshield washer fluid.
- A robust design and durable construction work well in a constant use production environment.
- Aluminum and plastic construction are used to minimize weight and eliminate corrosion.

TECHNICAL SPECIFICATIONS:

Weight (typical) . . . . . 2.5 lbs (1.13 kg)	Air Port Fitting . . .1/4" Dia. one Touch Connectors
Fluid. . . . . Windshield Washer and Water	Flow Capacity Fluid (Typical) @ 30 PSI . . . . . .0.31 L/sec
Fluid/Vacuum Port Fitting . . . 3/8" or 1/2" SAE FL	Maximum Fluid Pressure. . . . . 30 psi
Air Supply Pressure. . . . 60 psig (4.2 kg/cm^2) Min.	

Production Control Units, Inc.
2280 West Dorothy Lane, Dayton, Ohio 45439-1892 Phone (937) 299-5594 FAX: (937) 299-4843

Web: www.pcuinc.com

Series 120
Oil Fill Tool

FEATURES

- Simple attachment
- Drip free operation
- High oil flow rate
- Pick-N-Place
- Fail safe operation
- Rugged & durable construction
- Easily maintained
- Light Weight

The PCU Compufill Series 120 Fill Tool connects to front or rear differential for filling. This tool adapts the filling equipment to the differential system.

Typical tool operation is for only the operator to locate the tool into the fill port. Upon initiation of the fill cycle, the tool, under control of the fill machine will fill to a specified volume. Upon completion, the tool will shut off fluid and start dripless cycle. All models are designed to provide minimum drip operation.

Series 120 tools can be easily modified to fit your fill port. Contact our Order Department at (1-937-299-5594) for your application requirements.

Series 120 Oil Fill Tool

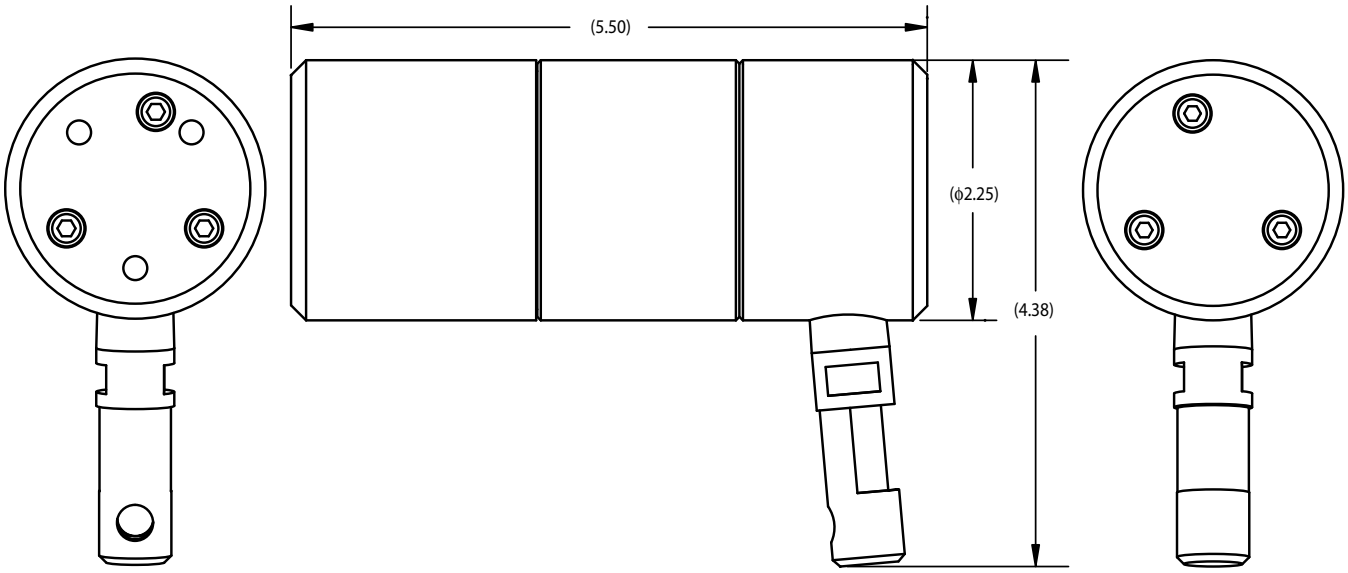

- Fits large and small fill ports.
- Large internal porting for high flow rate.
- Tool designs for volume fill.
- Tools are built with spring returns on the valve ports for fail-safe operation during power loss.
- All phases of evacuation and fill cycle internal to tool are automatically controlled by the fill machine.
- Interfaces to the Compufill Series 120 tool include fill port and vacuum (dripless port).
- A robust design and durable construction work well in a constant use production environment.
- Aluminum and stainless steel construction are used to minimize weight and eliminate corrosion.

TECHNICAL SPECIFICATIONS:

Weight . . . . . 3 lbs (1.45 kg)	Fluid/Vacuum Port Fitting . . . . . 1/4" NPT (Female)
Fluid. . . . . Oil	Min. Fluid Pressure . . . . . 30 psi

Production Control Units, Inc.

2280 West Dorothy Lane, Dayton, Ohio 45439-1892 Phone (937) 299-5594 FAX: (937) 299-4843

Web: www.pcuinc.com

03-11-10

Series 106
Radiator Leak Test Tool

FEATURES

- Simple attachment
- Air operated valve
- High flow rate
- Automated disconnect
- Fail safe operation
- Rugged & durable construction
- Easily maintained
- Light weight

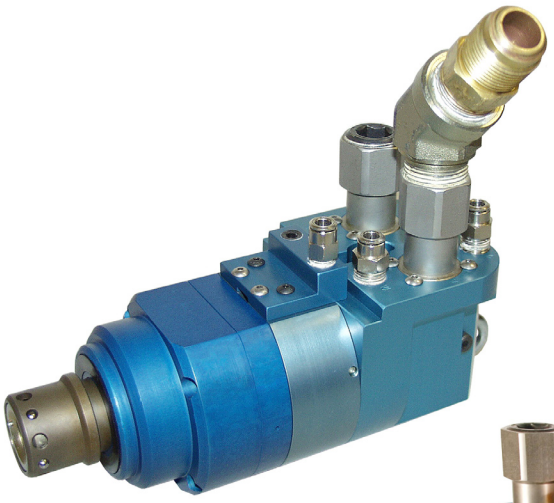

Internal BalLoc Style

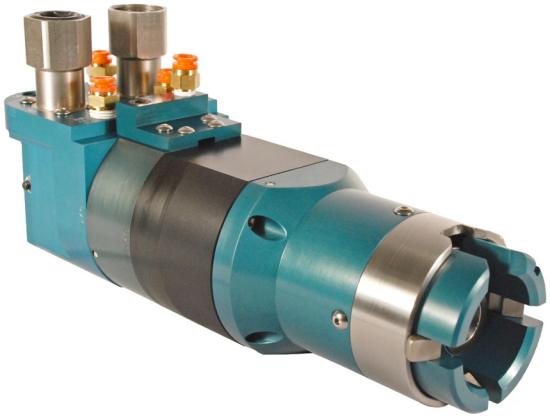

External Thread Lock Style

The PCU Compufill Series 106 Leak Test Tool connects to engine cooling systems for pressure decay test. This tool adapts the test equipment to the cooling system.

This series of tools includes models which can be attached to most common radiator fill necks and surge tank inlets.

Typical tool operation is semi-automatic in that the operator has only to locate the tool onto the fill neck. Upon initiation of the fill cycle, the tool, under control of the fill machine will automatically seat and seal in order that the pressure test operation can proceed. Upon completion of these operations, the tool unseats and can then be retracted.

The PCU Compufill Series 106 tool provides flexibility from manual operations to those which are fully automated when attached to an tool presentation arm.

Series 106 tools can be easily modified for power steering, fuel or other fluid applications. Contact our Order Department at (1-937-299-5594) for your application requirements.

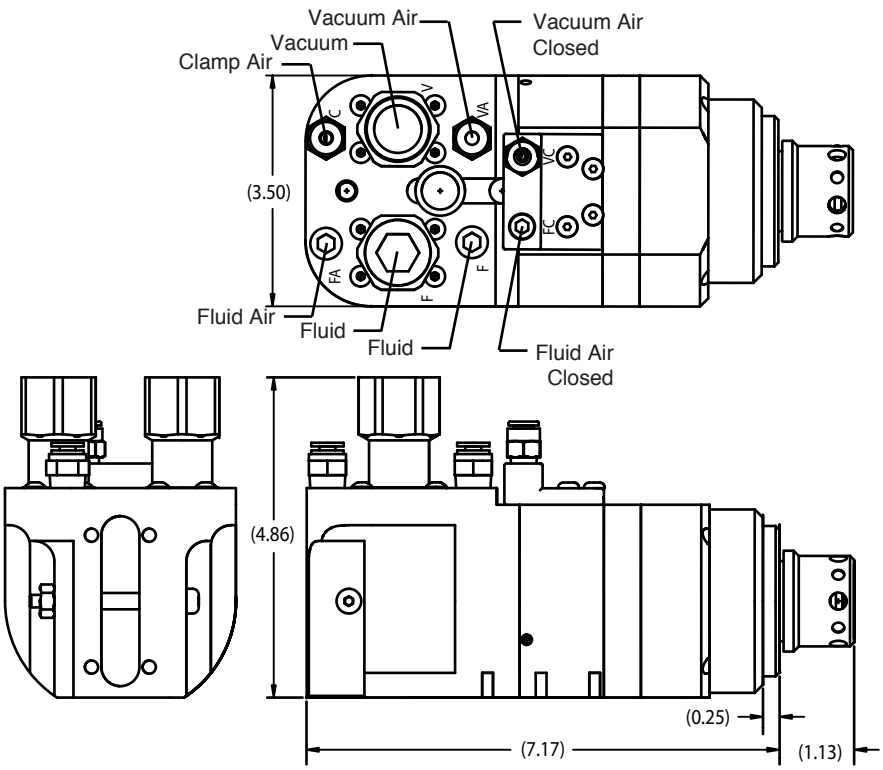

External Thread Lock Shown

- Tools can be used with PCU tool presentation arms for manual connect - pick and place - semi-auto attachment to vehicle reservoirs.
- Fits large and small radiator necks and all size surge tanks.
- Large internal porting for high flow rate.
- All phases of evacuation and fill cycle internal to tool are automatically controlled by the evacuate and fill machine.
- Tools are compatible for operation with programmable logic, relay, or computer based control systems.
- Interfaces to the Compufill Series 106 tool include clamp, seal and valve control air.
- A robust design and durable construction work well in a constant use production environment.
- Aluminum and stainless steel construction are used to minimize weight and eliminate corrosion.

TECHNICAL SPECIFICATIONS:

Weight . . . . . .3.25 lbs (1.5 kg)	Air Port Fitting . . . 1/4" Dia. one Touch Connectors
Fluid. . . . . Air	Flow Capacity Fluid. . . . . 9.3 Cv Typical
Pressure Port Fitting . . . . . 1/2", 3/4", or 1" Barbed Hose (Other port sizes are available)	Maximum Fluid Pressure. . . . . 50 psi
Min. Air Supply Pressure .70 psig (4.9 kg/cm^2) Min.	Radiator/Surge Tank . . . . . Common sizes for Rad & Surge Tanks

Production Control Units, Inc.
2280 West Dorothy Lane, Dayton, Ohio 45439-1892 Phone (937) 299-5594 FAX: (937) 299-4843
 Web: www.pcuinc.com

Series 116
Fuel Test Tool

FEATURES

- Simple attachment
- Air operated valve
- Clamp and seal detection
- Drip free operation
- High fluid flow rate
- Automated disconnect
- Fail safe operation
- Rugged & durable construction
- Easily maintained
- Light Weight

The PCU Compufill Series 116 Fuel Fill Tool connects to engine fuel systems for leak test and/or filling. This tool adapts the filling equipment to the fuel system.

The PCU Compufill Series 116 tool can be operated in conjunction with all PCU and other compatible fuel fill machines. This series of tools includes models which can be attached to most common fuel fill necks.

Typical tool operation is semi-automatic in that the operator has only to locate the tool onto the fill neck. Upon initiation of the fill cycle, the tool, under control of the fill machine will automatically seat and seal check for proper clamping before leak check, and filling operation can proceed.

Upon completion of these operations, the tool unseats and can then be retracted. All models are designed to provide minimum drip operation.

The PCU Compufill Series 116 tool provides flexibility from manual operations to those which are fully automated when attached to an tool presentation arm.

Series 116 tools can be easily modified to meet your applications. Contact our Order Department at (1-937-299-5594) for your application requirements.

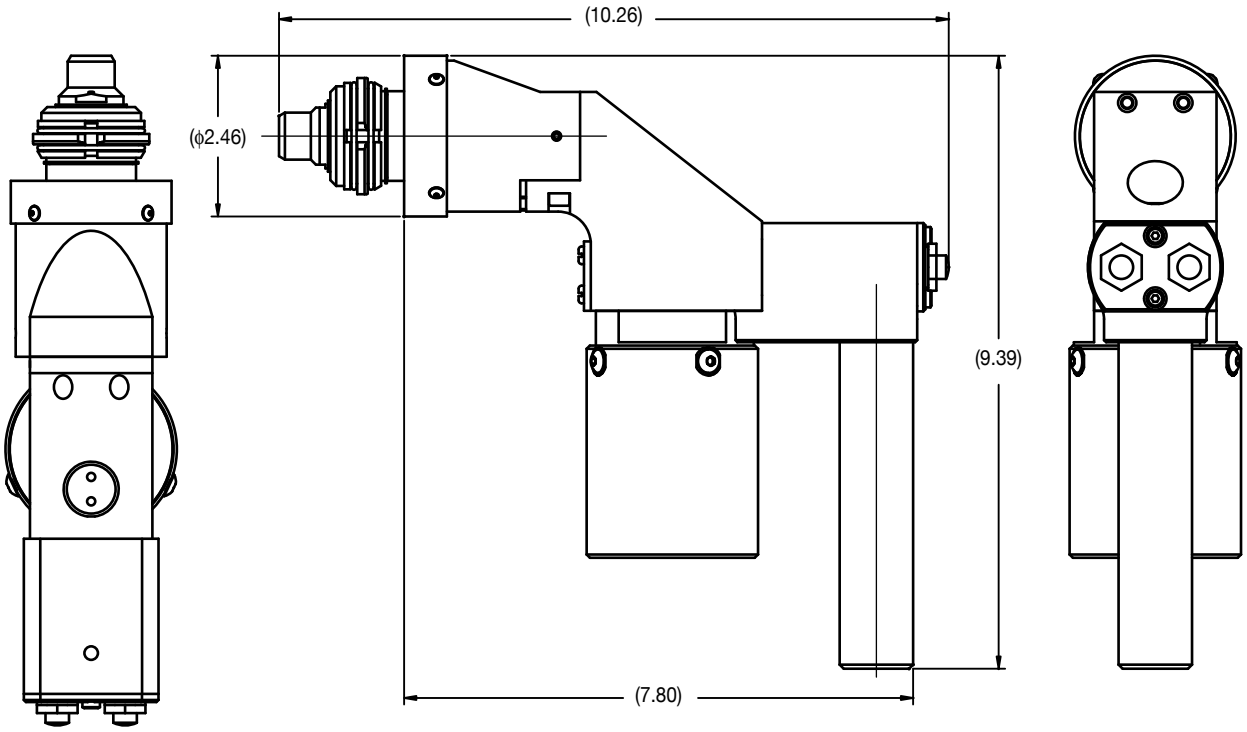

- Tools can be used with PCU tool presentation arms for manual connect - pick and place - semi-auto attachment to vehicle reservoirs.
- Fits large and small fuel necks.
- Large internal porting for high flow rate.
- Tool designs for volume fill.
- Tools are built with spring returns on the valve ports for fail-safe operation during power loss.
- Tool design includes the ability to detect if properly clamped on fill neck.
- All phases of fill cycle internal to tool are automatically controlled by the fill machine.
- Tools are compatible for intrinsically safe operation with programmable logic, relay, or computer based control systems.
- Interfaces to the Compufill Series 116 tool include clamp, seal and valve control air, and fluid air.
- A robust design and durable construction work well in a constant use production environment.
- Aluminum and stainless steel construction are used to minimize weight and eliminate corrosion.

TECHNICAL SPECIFICATIONS:

Weight . . . . . .4.57 lbs	Flow Capacity . . . . . 2.93 Cv Typical
Fluid. . . . . Petrol	Maximum Fluid Pressure. . . . . 30 psi
Fluid Port Fitting . . . . . (female) 3/4" NPT (Other sizes are available)	
Air Supply Pressure. . . .110 psig (7.7 kg/cm^2) Min.	
Air Port Fitting . . . 1/4" Dia. one Touch Connectors	

PATENTS:

This tool is manufactured under U.S. Patent No. 6,799,614 B1.

Production Control Units, Inc.

2280 West Dorothy Lane, Dayton, Ohio 45439-1892 Phone (937) 299-5594 FAX: (937) 299-4843

Web: www.pcuinc.com

Series 99 and 106
Manual Adapters

FEATURES

- Simple attachment (manual or auto clamp)
- Secondary reservoir fill
- Repair Bay Fill
- Dry evacuation circuit
- Drip free operation
- High vacuum flow rate
- High fluid flow rate
- Manual disconnect
- Fail safe operation
- Rugged & durable construction
- Easily maintained
- Light Weight

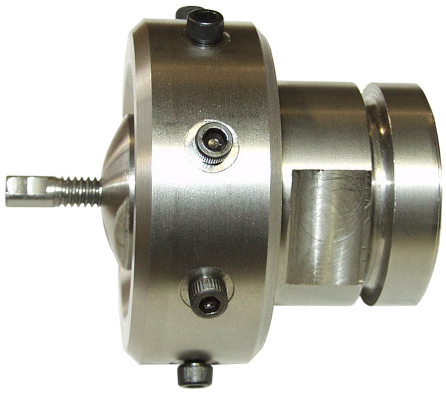

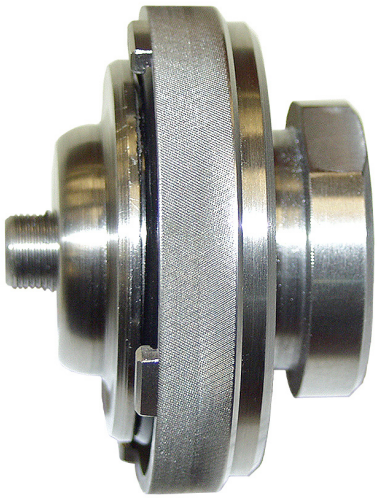

(Or drop sleeve to lock)

The PCU Compufill Series 99 and 106 manual adapters is the interface between a reservoir and the filling tool adapter. When multiple fill necks exist on the same production line, custom adapters are required to use one common tool.

Series 99 adapters adapt to brake or power steering fill necks and series 106 adapters adapt to radiator/coolant fill necks.

Typical tool operation requires an operator to insert adapter in fill neck, rotate sleeve to lock and seal. Operator will locate fill tool on adapter and initiate start cycle. Upon completion, operator removes tool and adaptor.

Series 99 and 106 manual adapters can be easily modified for your application. Also, semi-automatic adaptors are available which clamp onto reservoir by air activated piston. Contact PCU engineering for your application requirements.

Series 99 and 106 Manual Adapters

Series 99

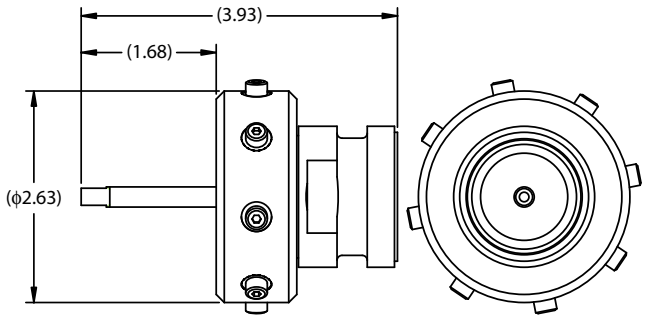

Series 106

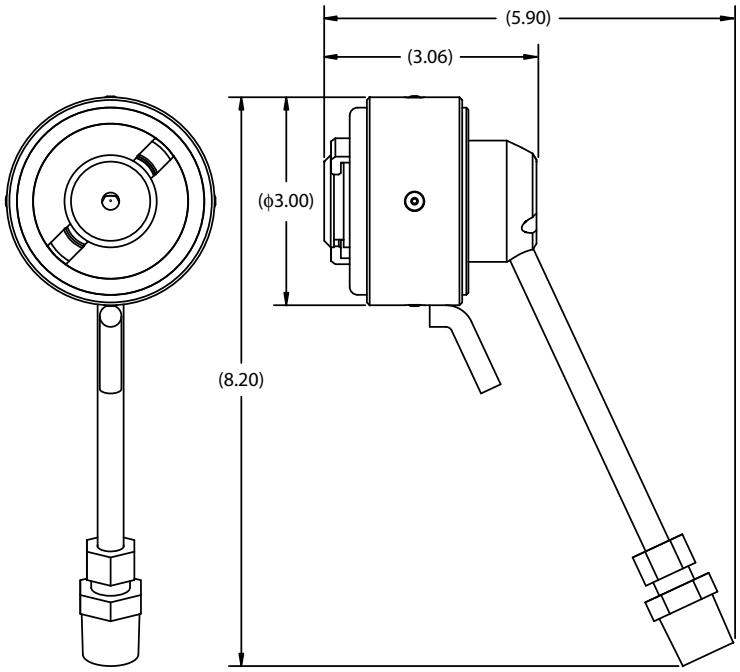

* Typical dimensions are shown, your dimensions will very per your application.

- Adaptors are used for - Pick-and-Place - semi-auto attachment to vehicle reservoirs.
- Fits large and small fill necks and all size surge tanks.
- Large internal porting for high flow rate.
- Adaptor designs for volume or pressure fill.
- Adaptors can include the ability to fill the overflow bottle during the normal cycle.
- Interfaces to the Compufill Series 106 tool include clamp, seal and valve control air, coolant mixture and vacuum.
- A robust design and durable construction work well in a constant use production environment.
- Aluminum and stainless steel construction are used to minimize weight and eliminate corrosion.

TECHNICAL SPECIFICATIONS:

Weight . . . . . .1.0 lbs (0.45 kg)

Flow Capacity . . . . . .Same as fill tool

Maximum Fluid Pressure. . . . . .Based on maximum reservoir fill pressure

Production Control Units, Inc.

2280 West Dorothy Lane, Dayton, Ohio 45439-1892 Phone (937) 299-5594 FAX: (937) 299-4843

Web: www.pcuinc.com

03-11-10

WE SPECIALIZE IN CUSTOM COUPLERS & TOOLING TO SUIT YOUR APPLICATION.


Series 25


Series 86


Series 87


Series 91


Series 93


Series 98


Series 100 & 101


Series 109


Series 250


Series 410


Series 500


Series 250 Evac & Charge


Series 13000


Series 104

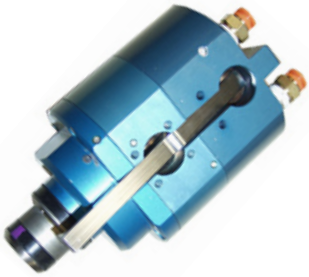
Series 106


Series 106 Adapter

Call our Coupler & Specialty Tooling Team for more information.

Phone: (937) 299-5594 FAX: (937) 299-3843
Web Site: www.PCUInc.com Email: couplers@PCUInc.com